Volume 77 Number 12
December 2009

$7.00
incl. GST

Amateur Radio

WIRELESS INSTITUTE OF AUSTRALIA

Shack tools to build or buy

See Foundation Corner ... page 62

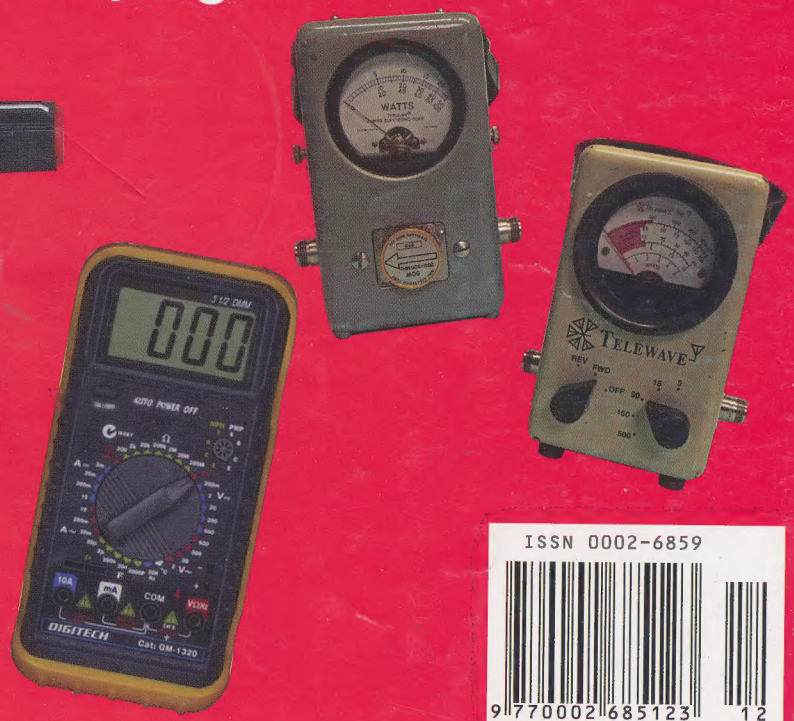

ISSN 0002-6859
9 770002 685123 12

Also

T-boom Yagis

SMT Paddyboard

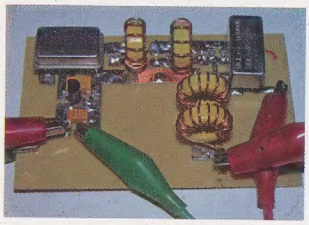

VK9NI DXpedition

Taming SMPS beast

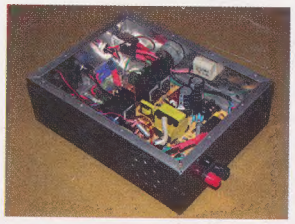

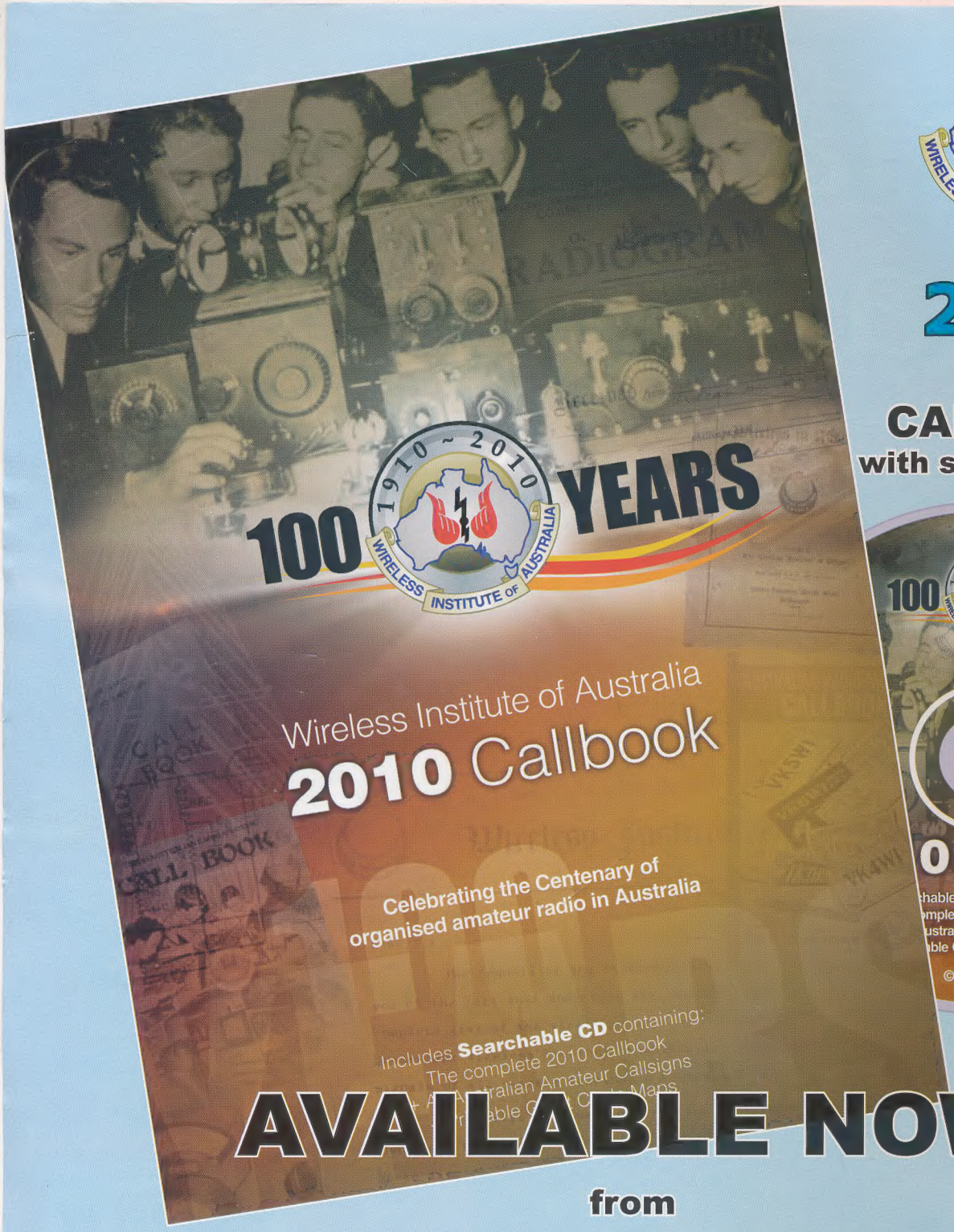

2010 WIA CALLBOOK

with searchable CD

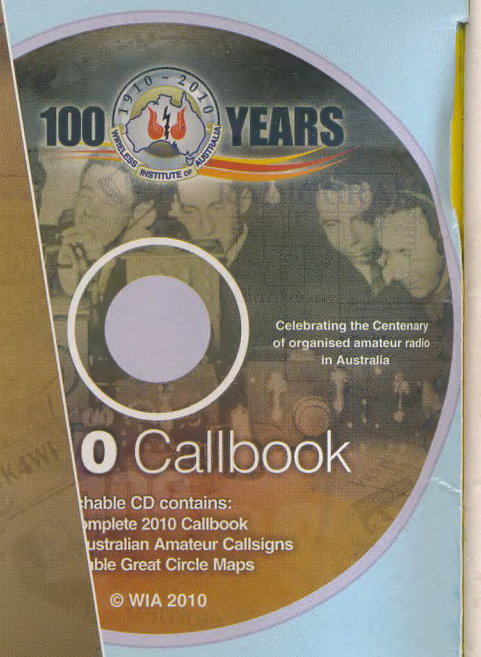

AVAILABLE NOW

from

WIA BOOKSHOP

03 9729 0400

or

www.wia.org.au

To purchase online go to:
www.wia.org.au/members/bookshop/item1116-1/index.php

Amateur Radio

Volume 77, Number 12
December 2009

The Journal of the Wireless Institute of Australia

ISSN 0002-6859

Editorial

Editor: Peter Freeman VK3PF
editor-armag@wia.org.au

Technical Editor: Peter Gibson VK3AZL

Publications Committee Members

Don Jackson VK3DBB
Evan Jarman VK3ANI
Tom Potter VK3UBS
Bill Roper VK3BR
Ewen Templeton VK3OW
Ernie Walls VK3FM
Greg Williams VK3VT

All circulation matters

nationaloffice@wia.org.au

How to submit material

General and Technical articles

Secretary
AR Publications Committee
PO Box 2042
BAYSWATER VIC 3153
or armag@wia.org.au

Columns and letters to Editor

Editor
AR Magazine
PO Box 273
Churchill Vic 3842
or
editor-armag@wia.org.au

Hamads

'Hamads'
PO Box 2042
BAYSWATER VIC 3153
hamads@wia.org.au

Advertising

All enquiries to
Newsletters Unlimited
PO Box 431
Monbulk Vic 3793
Phone: 03 9756 7797
newunltd@bigpond.net.au

Registered Office

Unit 20 11-13 Havelock Road
BAYSWATER VIC 3153
Australia
Phone: 03 9729 0400
Fax: 03 9729 7325

Production Deadlines

General articles, columns and advertising booking 5th day of previous month.
Hamads and advertising material 15th day of previous month

The contents of *Amateur Radio* are Copyright Wireless Institute of Australia © 2009

GENERAL

Election of Directors, call for nominations 5
Gridsquare Standings at 16 October 2009 12
Horkheimer Prize 2010 16
The VK9NI Norfolk Island DXpedition 2009 17
Allan Mason VK2GR and Tommy Horozakis VK2IR
Amateur radio gives you two million friends 19
Al Shawsmith ex VK4SS
WIA 100 Committee call for articles 24
The 2009 Remembrance Day Contest results 39
Peter Harding
Ross Hull Memorial VHF-UHF Contest 2010 rules 41
John Martin VK3KM
Summer VHF-UHF Field Day 2010 rules 43
John Martin VK3KM

TECHNICAL

Twin channel remote control relays with PIN protection 5
Horrie Davis VK2LY
Paddy-board construction – SMT style 7
Peter Whellum VK5ZPG
Taming the SMPS beast 14
Ian Cowan VK1BG
A complete 8 MHz IF system for USB, LSB and CW for a HF transceiver 20
Peter Wathen VK3EPW
A 30 watt linear amplifier for two metres 25
Dale Hughes VK1DSH
T-boom Yagis 30
Barry Miller VK3BJM
Tools and Test Equipment (Foundation Corner Four) 62
Ross Pittard VK3CE

COLUMNS

AHARS (VK5) 48
ALARA 55
AMSAT 49
Contests 41, 43, 57
DX - News & Views 44
Editorial 2
Foundation Corner 61
Hamads 59
News from... 36
VK2 36
VK3 38
VK4 46
VK7 40
RAOTC 58
SK 52
Spotlight On SWLing 29
VHF/UHF – An Expanding World 51
WIA Comment 3
WIA News 4

Our cover this month

So simple it's a world beater. Our Foundation Corner contributor Ross Pittard outlines some simple test equipment. Shown is the VK5JST Antenna Analyser, hundreds of which are sold in kit form around the world by SCARC.

Contributions to Amateur Radio

Amateur Radio is a forum for WIA members' amateur radio experiments, experiences, opinions and news. Manuscripts with drawings and/or photos are welcome and will be considered for publication. Articles attached to email are especially welcome. The WIA cannot be responsible for loss or damage to any material. Information on house style is available from the Editor.

Back Issues

Back issues are available directly from the WIA National Office (until stocks are exhausted), at $8.00 each (including postage within Australia) to members.

Photostat copies

If back issues are unavailable, photocopies of articles are available to members at $2.50 each (plus an additional $2 for each additional issue in which the article appears).

Disclaimer

The opinions expressed in this publication do not necessarily reflect the official view of the WIA and the WIA cannot be held responsible for incorrect information published.

Amateur Radio Service

A radiocommunication service for the purpose of self-training, intercommunication and technical investigation carried out by amateurs; that is, by duly authorised persons interested in radio technique solely with a personal aim and without pecuniary interest.

Wireless Institute of Australia

The world's oldest National Radio Society, founded 1910.

Representing

The Australian Amateur Radio Service

Member of the

International Amateur Radio Union

Registered Office of the WIA
Unit 20, 11-13 Havelock Road
Bayswater, Victoria, 3153
Tel: (03) 9729 0400 Fax (03) 9729 7325
email: nationaloffice@wia.org.au
http://www.wia.org.au

All mail to

PO Box 2042 BAYSWATER VIC 3153

Business hours: 10am – 4pm weekdays

National Office staff

Margaret Williams	Administration Officer
Dianne Ashton	Examination Officer

Board of Directors

President	Michael Owen	VK3KI
Vice-President	Ewan McLeod	VK4ERM
Secretary	Geoff Atkinson	VK3AFA
Treasurer	John Longayroux	VK3PZ
Members	Robert Broomhead	VK3DN
	Peter Young	VK3MV
	Ron Bertrand	VK2DQ
	Bob Bristow	VK6POP
	Phil Wait	VK2ASD

Coordinators

AMSAT	Paul Paradigm	VK2TXT
ARDF	Jack Bramham	VK3WWW
Australian ARISS	Tony Hutchison	VK5ZAI
Awards	Eddie de Young	VK4AN
Clubs	Ted Thrift	VK2ARA
Contests	Phil Smeaton	VK4BAA
John Moyle Memorial Field Day		
	Denis Johnstone	VK4AE
Editor 'AR'	Peter Freeman	VK3PF
EMC/EMR	Gilbert Hughes	VK1GH
	Keith Malcolm	VK1ZKM
Standards	Gilbert Hughes	VK1GH
	David Wardlaw	VK3ADW
	John Bishop	VK2ZOI
NTAC	John Martin	VK3KM
Historian	Will McGhie	VK6UU
IARU Region 3 Liaison		
	Geoff Atkinson	VK3AFA
Intruder Watch	Karl Hennig	VK6XW
International Travel Host		
	John Miller	VK3DJM
ITU Conference & Study Group		
	Gilbert Hughes	VK1GH
	David Wardlaw	VK3ADW
	Keith Malcolm	VK1ZKM
	Brett Dawson	VK2CBD
QSL Curator	National Office	
QSL Bureau & VK9/0 QSL Manager		
	Neil Penfold	VK6NE
Repeater	Peter Mill	VK3ZPP
Webpage	Robert Broomhead	VK3DN
Emergency Communications Group		
Coordinator	Phil Wait	VK2ASD
Members	Ewan McLeod	VK4ERM
	Peter Young	VK3MV

Editorial

Peter Freeman VK3PF

Another year (almost) gone

December is here again – is it just me or does everything seem to be more hectic?

Time to start thinking about reviewing the "to do" list and prioritise the tasks. High on my list must be to build a Yagi antenna for the six metre band. The current vertical just does not cut the mustard! There are plenty of other amateur radio tasks as well – I seem to have gone backwards this year.

And of course we have a big year ahead, with the celebrations of the centenary of organised amateur radio in Australia.

Please do remember to write up the events in which you are involved, and take lots of photographs at as high a resolution as you can manage. Then send in the material to both this magazine and to the Centenary Committee – we will publish the best material in the magazine and you can add to the future history of the WIA.

Some brief words about photographs

Over the coming weeks, I intend to update the *Guide to Authors* material that is available for download on the magazine section of the WIA website.

For now, let me simply make a plea to anyone taking digital photographs that might end up being submitted for publication:

Please set your camera to take and store photos at the highest possible resolution!

We often receive images that are very small – any file (even a jpg format image) that is less than about 100 kB in size is unlikely to be usable for the magazine. We would much prefer to have photos that are at least 500 kB in size, and bigger if you think that it might be worthy of consideration for the cover or inside cover pages.

You may need to download the images more often from the camera to the PC, and to also save the files (with modified names) to smaller versions to share with friends and family via email, but for reproduction in the magazine, we really do prefer the images as big as we can get! If need be, send us a smaller version of the file initially, but please tell us that a higher resolution version is available.

I can then contact you for the higher resolution file if needed. For most articles, we can wait for a CD to arrive via mail. If we need something urgently, there are other mechanisms available to transfer the file/s.

Please do think about the composition of the photograph before you hit the shutter button. Also think about the lighting. If the subject's face is in shadow because of a strong light source coming from behind, activate your flash to in-fill the face. A better image should result.

Articles

Please continue to put fingers to keyboard (or pen to paper) and write articles for *Amateur Radio*. We currently have a reasonable stock of technical articles varying from simple to complex projects. We thank all who have contributed over the past year. Keep up the good work everyone.

We currently have few general articles ready for publication – I am sure that can change if you think about reporting on events locally. Some brief material may end up placed in the "News From" section of the magazine, but others may make it as feature articles.

Club advertising

One item that requires updating is the provision regarding the placement of Club advertising in *Amateur Radio*. We are attempting to rationalise our processes, thereby ensuring that it is harder for us to miss a Club advertisement.

Part of this process will be the establishment of a single registration point for advertising books and content. We can then be sure that we have all the required details; including billing details if the advertising needs us to charge the Club.

Club Secretaries can expect to receive advice of the changes once they have been confirmed. Once finalised, the policy document will also be placed on the *Amateur Radio* section of the WIA web site.

Season's Greetings

I trust that all readers have a safe and enjoyable festive season. Enjoy the celebrations (in moderation of course) and make some time to be on air. It looks like we are finally seeing some new cycle sunspots, so hopefully ionospheric propagation will be picking up!

As is our usual pattern, the next issue will be out in late January – a combined January/February issue.

Cheers, Peter VK3PF **ar**

WIA comment

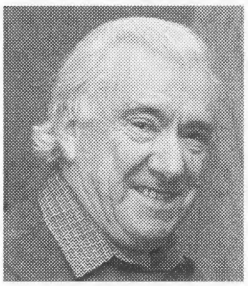

Michael Owen
VK3KI

Contributing to the Community

In the News page in this issue of Amateur Radio we report on yet another successful ARISS contact with a Victorian school.

ARISS (Amateur Radio on the International Space Station) started as SAREX, the Space Amateur Radio Experiment, and is a program sponsored by the National Aeronautics and Space Administration (NASA), the American Radio Relay League (ARRL) and the Radio Amateur Satellite Corporation (AMSAT).

Through amateur radio the astronauts on the ISS have been able to speak to children from over 500 schools all around the world, answering their questions.

Industry has complained of the shortage of radio technicians. In the past, young people developed an interest in radio, and then followed that by taking up a career in radio. We all know amateurs who have worked in radio and who followed that path.

In today's world many things compete for the interest of us all. It was one of the arguments advanced in favour of the Foundation licence that an easily achievable qualification and a licence that was sufficiently attractive would be a means to spark an interest in radio, and some of those who sought a Foundation licence would do so at an age before career decisions had to be made.

ARISS is a volunteer program started in 2000 by a group of radio amateurs to provide the amateur radio links for the students to speak to the crews on the International Space Station. The object of the program is to inspire students, worldwide, to pursue careers in science, technology, engineering and mathematics through amateur radio communications opportunities with the International Space Station on-orbit crew.

Students learn about life on board the ISS and explore Earth from space through science and mathematics activities. ARISS provides opportunities for the school community (students, teachers, families and local residents) to become more aware of the substantial benefits of human spaceflight and the exploration and discovery that occur on spaceflight journeys along with learning about technology and amateur radio.

Tony Hutchison VK5ZAI sat for his amateur licence in 1960, and developed an interest in amateur satellites. His first educational link up was with the Mir Space Station in 1993 when students from Loxton High School spoke with Cosmonaut Alex Serabrov. Since 2000 he has been one of the small group of volunteers with the ARISS program, and one of the nine approved amateur earth stations for the program.

Tony has been responsible for setting up ARISS contacts with over 30 schools in Australia, using either direct communication with the ISS or a telebridge, where a remote amateur station makes the contact with the ISS and is connected by telephone lines to the school. He has also worked with NZART to introduce the ARISS program to New Zealand schools.

Tony Hutchison VK5ZAI was one of the four South Australian Senior Australian of the Year finalists

The Australian of the Year Awards is a program of the National Australia Day Council.

The Council describes the awards as follows: "Each year our nation celebrates the achievement and contribution of eminent Australians through the Australian of the Year Awards by profiling leading citizens who are role models for us all. They inspire us through their achievements and challenge us to make our own contribution to creating a better Australia.

The Australian of the Year Awards provides all Australians with the opportunity to recognise someone who makes them proud.

The Awards operates at two levels - state/territory and national. State and territory selection committees select four finalists for each award category, with one of these finalists becoming the state/territory award recipient. State/territory award recipients then become the national finalists for the awards."

The awards are in four categories, the Australian of the year, the Senior Australian of the Year, the Young Australian of the Year and Australia's Local Hero.

The state and territory Senior Australians of the Year finalists were announced on 9 November 2009, and included cook and restaurateur Maggie Beer (SA), crime victims' advocate Ken Marslew (NSW), historian Prof Geoffrey Blainey AC (VIC) and singer/songwriter Kev Carmody (QLD).

Tony Hutchison VK5ZAI was one of the four South Australian Senior Australian of the Year finalists, recognising his work as one of the nine approved Satellite Earth Stations for the Amateur Radio on the International Space Station (ARISS) program and as Australian ARISS Coordinator.

The South Australian awards were presented and the national finalists announced at a ceremony at the National Wine Centre in Adelaide on 11th November 2009, in the presence of the Governor of South Australia, Rear Admiral Kevin Scarce.

We can be proud that Tony's work has been recognised in such an important way.

We should also reflect that our interest, amateur radio, can itself contribute something of value to our society. Very often we tend to think of that contribution in terms of emergency communication only. But the contribution of amateur radio to our community can be much wider.

Tony has demonstrated that very well. **ar**

WIA News

Robert Broomhead to resign as a WIA Director

The WIA Board has accepted with regret the resignation of Robert Broomhead VK3KRB/VK3DN as Director of the WIA with effect from 31 December 2009.

Robert, who has served as Director of the WIA since 8 November 2004, advised the Board that he wished to resign after a five year commitment.

Commenting on Robert's resignation, WIA President Michael Owen VK3KI said "Robert has made a great contribution to the WIA, being responsible for the "corporate look" that has been adopted by the WIA, the IT side of our activities and is responsible for the incredibly successful Annual Meeting weekends that have become such a feature of the WIA. We are grateful that he will continue to assist the Centenary Committee, and, of course, we have accepted his offer to continue as Webmaster for the WIA website. The Directors cannot adequately express their gratitude for all that Robert has done."

It falls to the WIA Board to appoint a Director for the balance of Robert's term, which ends at the AGM in 2011.

Queensland Clubs Meet

The Queensland Advisory Committee under Chairman Don Wilschefski VK4BY organised a luncheon meeting of Queensland clubs at the Geebung-Zillmere RSL club near Brisbane on Sunday 15 November 2009.

Representatives of some 14 clubs participated, from as far away as Townsville and Rockhampton.

WIA President Michael Owen VK3KI presented a report on WIA activities.

His wide ranging report covered the representation role of the WIA both nationally and internationally, the growing importance of the regional telecommunications organisations in the processes associated with the ITU's WRCs and the problems this presented for the WIA, the work now undertaken by the WIA on behalf of ACMA, the centenary celebrations and the role of the clubs next year, emergency communications and the financial pressures facing the WIA and the need for the clubs to encourage WIA membership.

WIA Vice President Ewan McLeod VK4ERM lead a discussion on possible activities to attract new people to amateur radio and Peter Schrader of Emergency Communications in south east Queensland described the provision of emergency communications in the emergency management structure in Queensland.

Graham Kemp VK4BB talked of the WIA broadcasts and demonstrated VK1WIA being transmitted on digital radio.

This was the second successful major WIA meeting of clubs this year, the previous meeting being in Adelaide last September, attended by WIA Director Robert Broomhead VK3DN and President Michael Owen.

Amateur is SA Senior Australian of the Year finalist

The Australian of the Year Awards is a program of the National Australia Day Council, with state and territory selection committees selecting four finalists in each category, including the Senior Australian of the Year.

The awards recognise the individual's contribution to their community.

The South Australian Committee selected an amateur, Tony Hutchison VK5ZAI as one of the four South Australia finalists in the senior category for his work as one of the nine approved Satellite Earth Stations for the Amateur Radio on the International Space Station (ARISS) program and as Australian ARISS Coordinator organising the link ups for schools to contact the amateurs on the International Space Station, stimulating the interest of young people in science and technology.

The finalists were announced at an impressive ceremony at the National Wine Centre in Adelaide attended by the Governor of South Australia and the Deputy Premier of South Australia. WIA President Michael Owen VK3KI was present as a guest of Tony.

While Maggie Beer of television fame went on as a national finalist, the recognition of the contribution of amateur radio and of Tony to the community has delighted the WIA Board.

2010 WIA Centenary Callbook

The WIA website reported that stocks of the much awaited 2010 WIA Centenary Callbook were due to arrive at the WIA office by 30th of November.

Orders can be placed from the Callbook page in the WIA online bookshop.

WIA affiliated clubs may also purchase callbooks in bulk for sale at club meetings, hamfests etc. Any WIA affiliated club can purchase a full box of callbooks free of delivery charges. Full details of the offer were emailed to clubs and the downloadable order form is available via the WIA affiliated clubs section of the website.

Three schools in a single ARISS contact

A small school at Sassafras about 40 km east of Melbourne is the latest to have an amateur radio contact with a crew member on the International Space Station (ISS) and in doing so achieved a notable first for this activity.

A total of 11 students from Sherbrooke Community School put questions to Astronaut Robert Thirsk, but in a spirit of friendship shared their experience with two other schools. The ARISS contact on Wednesday 28 October also included questions from Sherbrooke's sister schools - the Jiaolun Middle School in China and the Early Learning Centre at Thimphu in Bhutan.

Seven of the Sherbrooke students involved are radio amateurs, each holding an Australian Foundation licence (Christopher VK3FLAT, Emma VK3FERP, Sam VK3FSAM, James VK3FJAM, Oscar VK3FOSC, Callum VK3FSDP and Monique VK3FWPZ). They used their personal callsigns during the contact and will qualify for a personal QSL card when the crew returns to earth.

ARISS Coordinator, Tony Hutchison VK5ZAI who helped facilitate the contact, said the involvement of students who have their own amateur licence in the ARISS program is rare. It previously occurred in 2002 when girls at the Harrogate Ladies College in the UK had their ARISS contact.

VK100WIA callsign roster update

As this issue of Amateur Radio is put together, only 12 of the three day slots remain for clubs to register to use the special callsign VK100WIA to celebrate the Centenary of Organised Amateur Radio in Australia next year.

Registration details can be seen under the Centenary section of the WIA website.

The special issue call sign will be used by the WIA itself in May and shared amongst the WIA's affiliated radio clubs until the end of October.

ar

Twin channel remote control relays with PIN protection

Horrie Davis VK2LY

This is an updated version of a PIN protected circuit which has operated faultlessly for over 15 years, controlling QTH locks and lighting.

With the decoder DIL switches set to any of 10000 positions and with the audio in socket connected to the home base stations speaker, on a pre selected frequency, this circuit offers a reasonably secure method of remote control.

To actuate relay A, transmit * which zeros the counter, resets the flip flops and starts a five second timer, during which time A and the four digit PIN is sent. Relay A will be actuated. To switch off, transmit * then A then the four digit PIN code then Relay A will switch off. To actuate relay B substitute B for A.

For clarity, only one half of each of the output flip flops is used. The floating inputs of idle sections are taken to ground.

The DTMF audio signal is taken to input of the 145436 decoder. The output of which is in binary 1.2.4.8. format. This is then fed to the 4514 to give 15 separate outputs. Numerals 1 to 10 are taken to 4 sets of 10 position dual in line (DIL) preset switches set to match the incoming PIN code. The 4514 pin 19 is the * signal and 4514 pin 14 is the # signal. The 4514 pin 13 is letter A and 4514 pin 16 letter B output.

Relay A turn on

The output from 145436 pin 12 which goes high on receipt of a VALID DTMF signal is used to clock around the 4017 to provide a 1 to 4 sequential high to the top 4 sections of the 4073s. When * is received (4514 pin 19), it resets the 4017 VALID digit counter, all flip flops and, by turning on the BC547, brings the high on 555 pin 2 to ground causing the 555 pin 3 to go high and distribute 5 volt around various circuits for a preset 5 seconds.

When A is decoded (4514 pin 13) the top 4081 AND gate turns on, setting the top flip flop. Its Q output is taken to the second 4081 pin 5. NB: As A is the first VALID count, the first digit of the PIN code is really the second VALID count. (actually * is the first VALID signal, but as it is self cancelling it does not clock the 4017 counter)

The 4 digit P.I.N. code is then taken thru the preselected settings of the DIL switches, the outputs of which are taken in turn, from the top, to the first 4 4073s.

As each DTMF number is activated the VALID signal from the 145436 clocks the 4017 round another step, putting a sequential high on each of the 4073s in turn. With the output of the 555 on the third legs of all the 4073s for 5 seconds, each of the 4043C flip flops sets to ON in turn. With all the input gates of the bottom 2 4073 AND gates high, the output pin 10 is high.

This high is taken to 4081A pin 6 and 4081B pin 6 (as there is no voltage on 4081B pin 5, this circuit remains inert). As pin 5 is already high, pin 4 sets the 4043A flip flop thru pin 12 taking the output high, turning on the top BC547 energising the relay and also resetting the top section of 4043A.

Relay A turn off

Everything that has been explained to turn the relay on is repeated, the only subtle difference being, as the bottom section of the 4043A is already on, there is no spike from the turn on function to turn off the top section of the 4043A thru reset pin 7, so the output remains high and that high is taken to pin 1 of the 4081A. When # is received at pin 2 the AND gate conducts, sending pin 3 high, resetting the bottom half of 4043A, turning the relay off.

The operation of relay B is exactly the same, just substitute B for A in the description. Using the clocked 4017 sequence, relays can be turned on or off in any order but they cannot be accidentally switched together. Any random DTMF signal which may have entered the system during standby causing something to clock or set is eliminated by first sending the reset signal *. Limiting the 555 conduction time to five seconds reduces the possibility of bogus signals causing circuit malfunction.

Circuit Diagram on next page

The Wireless Institute of Australia ACN 004 920 745

Election of Directors Call for Nominations

Pursuant to clause 14.1 (c) of the Constitution, the WIA Board has determined that the election of directors shall be conducted by postal ballot.

Three directors retire at the conclusion of the next Annual General Meeting which will be held at a time and a place to be announced but not later than 31 May 2010, namely Philip John Wait, Ronald William Ernest Bertrand and Robert Stanley Bristow. Each is eligible for re-election and Philip John Wait and Robert Stanley Bristow have offered themselves for re-election to two of the three vacancies.

Nominations are called for from others also seeking election as a director of the WIA.

A director must be a voting member of the WIA and must hold an Australian amateur radio licence.

Any person wishing to nominate as a candidate for election as director of the WIA must deliver or cause to be delivered to the Returning Officer by not later than 31 January 2010:

A statement signed by the candidate signifying his or her willingness to be a candidate for election as a director together with; the full name, age, occupation and callsign of the candidate, and such other biographical details or other information as the candidate wishes to accompany the ballot papers, but in all not exceeding 250 words.

Delivery to the Returning Officer may be made by hand when the WIA national office is open at:

Unit 20, 11-13 Havelock Road
Bayswater Victoria 3153

or by mail to:

PO Box 2042 Bayswater VIC 3153.

Nominations received by facsimile or by electronic means cannot be accepted.

Chris Chapman VK3QB returning officer.

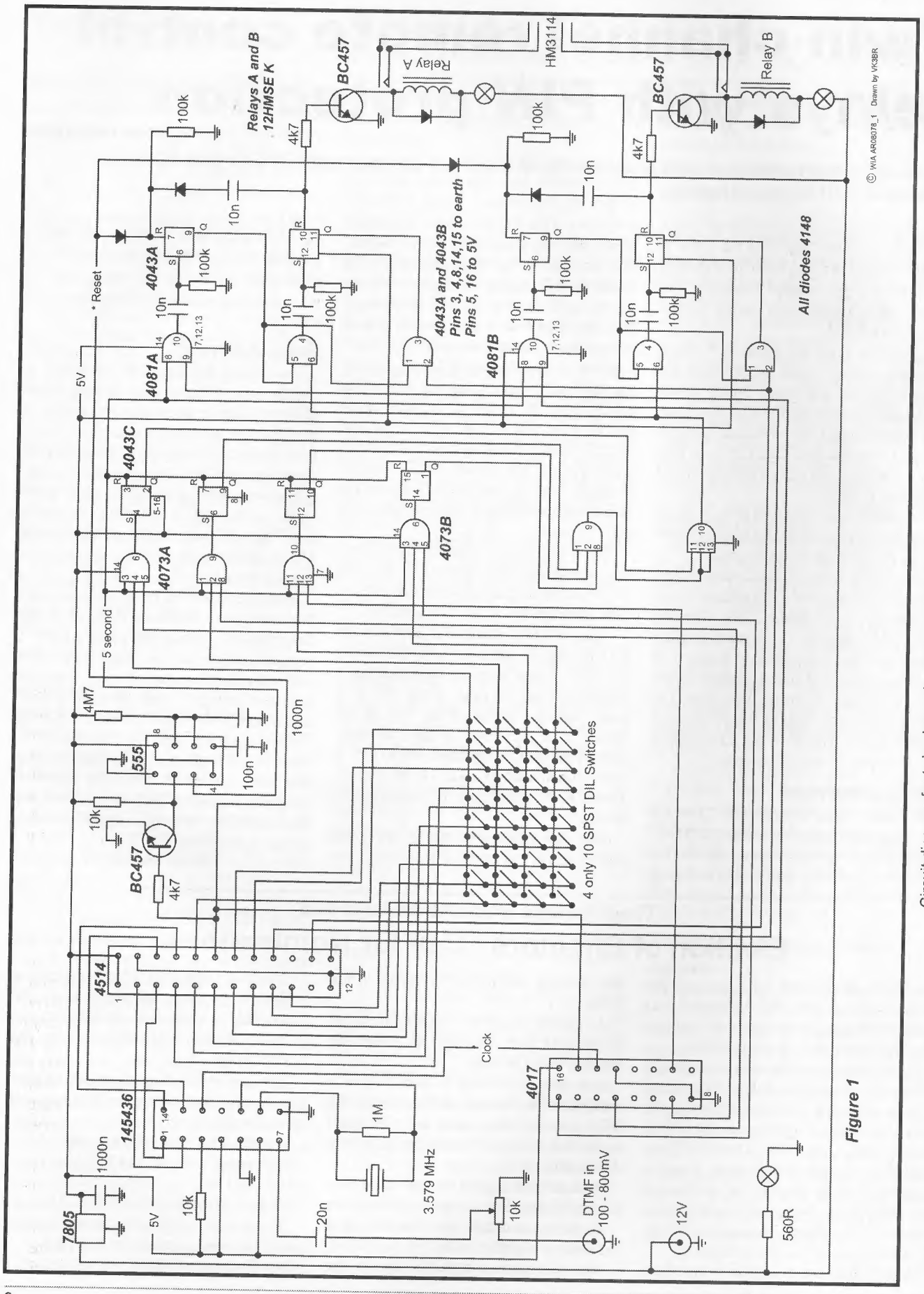

Figure 1

Circuit diagram for twin channel remote control relays with PIN protection

Paddy-board construction SMT style

Peter Whellum VK5ZPG

If you are into home-brewing and finding that many leaded components are becoming scarce or no longer available, or you'd simply like to try something new, this article may make it easier for you to start using Surface Mount Technology (SMT) components.

Introduction:

When first licensed back in 1970, most of my amateur radio equipment was home built – more out of financial necessity due to raising a young family, but also because I had been building electronic equipment since I was a kid. As my finances improved, and after I had moved back closer to civilisation from my outback postings, I again became interested in home-brewing.

My early years saw much of my equipment based on valves with point-to-point and tag-strip wiring techniques used. In the late 1960s I started to build equipment using discreet solid state devices, with home-brew etching of basic printed circuit boards (PCBs) – using contact type plastic sheets, a sharp pocket knife or scalpel and, shudder, nitric acid.... cough, splutter, goodbye lungs!

After I retired, and later moved to Quorn in 2002, the home-brewing bug struck with a vengeance, a situation not helped by Drew Diamond VK3XU, and his very popular *Radio Projects for the Amateur*, volumes 1 to 4. My first project was to build a modified version of Drew's *TCF-80*, a CW/SSB 4 W transceiver operating on 80 metres.

This was also my introduction into paddy-board (or Manhattan) construction, a system I find to be intuitive, fast and accurate (*Reference 1*). I had previously used the 'dead bug' style of construction, using flattened (and emptied!) jam or baked beans tins as a solderable base for bread-boarding projects, some time before I ever used PCB for the same purpose.

Trying to keep up with modern technology has seen my interest grow into using Surface Mount Devices (SMDs) and I found myself stocking up on various components, mainly of the larger 1206 type, a concession to my fading eyesight and seemingly ever-increasing slight hand tremors. I have found, however, that the traditional paddy-board style of construction, using small off-cuts of PCB for component 'lands' or 'tracks' was not particularly usable with SMDs.

I had more or less resigned myself to the fact that the best way to deal with SMDs was to etch purpose designed boards, all very time-consuming, especially for one-off projects, and involving several steps. I seemed to be spending more time on planning and preparation instead of actually building. Surely there had to be a quick alternative to SMD construction that did not require PCB design/layout programs and PCB etching baths.

Lead-light copper foil:

During a recent session of surfing the Internet, I found myself, totally by accident, on the web site of the Adelaide Glass Centre, a lead-light supplies site based in Adelaide (*Reference 2*), and staring back at me from the display was a mention of copper foil tape – used in the lead-light industry for joining odd-shaped pieces of glass.

The foil that interested me was 4.76 mm (0.19 inch) wide and 1 mm (0.039 inch) thick – other available sizes appear to be in thicknesses of 1.25 mm (0.049 inch) and 1.5 mm (0.059 inch) and widths of 10, 6.5 and 5.0 mm. The foil tape comes in 33 metre (36 yard) rolls and is self-adhesive on one side (see Photos 1 and 2 on next page). One advertisement I saw mentioned that the self-adhesive glue is 'heat resistant' but this proved otherwise as you will read.

...staring back at me from the display was a mention of copper foil tape...

What could be better for making up thin copper tracks on blank or single-sided PCB (using the blank side)? A quick telephone call to the distributor confirmed that this particular size was in stock and for a cost of only $8.40 + GST, or around $12.00 posted. I placed an order and a roll arrived a few days later – unfortunately the thicker foil was not in stock but I will try that later. I suggest you 'Google' for 'leadlight copper foil'.

I wasted no time in some basic experiments with some old PCB off-cuts and soon found the whole system extremely user friendly, albeit with some minor problems as discussed below.

Incidentally, I make no claims as to the originality of this idea, but I have not been able to find any easily found similar methods on the Internet or in a number of technical books or magazines – my apologies to the author/s of any earlier similar articles if such is the case, but I can assure you this work has not been knowingly plagiarised.

The procedure:

The project

I decided to build a 'Signal Generator Extender', one based roughly around a project written up in *Experimental Methods in RF Design* (see *Reference 3*). Although my Rhode & Schwarz RF generator covers from 0.1 to 500 MHz, its resolution is only 100 Hz and I occasionally need 1 Hz for more exacting work, such as crystal filter design.

My HP-8922S GSM Test Set contains, among other things, a spectrum analyser and RF signal generator which has the required 1 Hz resolution but is limited to between 10 to 1,000 MHz. (A previous

article in AR, March 2009, describes a handy up-converter, designed by Mike VK4YNQ, which I built to enable the spectrum analyser to operate below 10 MHz).

Basically, the signal generator extender (converter) uses a balanced ring mixer with a fixed local oscillator of 20 MHz. The HP-8922S signal generator inputs signals (at -10 dBm) between 20 to 30 MHz to the converter, giving an output of 0.1 to 10 MHz.

Please note, however, that this article is not about this project but about the methods I used for its construction. Please feel free to contact me if you require more details of my experiments with this particular project.

Preparation and planning:

Carefully select a piece of PCB to suit the size of the project you intend to build – depending on the type of circuit you can either use double-side blank PCB material or, for RF work, use single-sided PCB – the copper side acts as a shield and by drilling holes from earth tracks to this screen, and soldering small links on each side, it makes for an ideal low impedance ground.

Personally I prefer to use single-sided boards as it is easier to use non-continuous ground tracks on the working side. My project was built on a spare piece of single-sided PCB measuring 80 x 50 mm (see Photo 3) – this size will allow me to add an additional amplifier stage and LPF if I find it necessary.

Make sure there are no deep scratches or chips on the blank side of the PCB and clean it thoroughly – I found methylated spirits to be as good as anything.

Using your mind's eye and careful trial and error, place the larger components, such as crystal oscillator module, toroids, mixer, and the like on the board in the position you would like to see them – if you are not sure, most circuits are drawn logically and with good separation between inputs and outputs, so simply follow that general layout.

Once you have an idea where larger components will be placed, then think about placement of your SMDs – I try to use the larger 1206 size as they are not too small to see and use, and are more difficult than the smaller sizes to ingest or inhale! Remember that you do not need very much space at all on which to mount these small devices.

Plan your ground, signal and voltage lines and have that in mind as you progress.

Copper foil track placement:

Simply cut off a piece of foil and backing paper slightly longer than you think you require for a particular track – household scissors are ideal for cutting the foil.

Using a sharp pocket knife or similar blade, carefully lift up one end of the foil from the backing tape, applying slight pressure against the blade so that the foil sticks to the blade – this makes it easier to place it accurately on the PCB.

If you're using long tracks, you may find the foil may curl back on itself – if you are careful it should not matter, provided it does not adhere to the remainder of the foil, creating a bit of a mess – discard it if that happens.

Carefully place one end of the foil on the desired position on the PCB making sure it is aligned nicely with an edge of the board (to keep tracks looking nice and parallel).

Then smooth the remainder firmly onto the board with your finger. I then found it best to use a flat, wide bladed screwdriver to ensure that the foil sticks firmly to the board – the end of a plastic biro or anything similar should do the same job.

I generally start with wide ground tracks, then voltage bus-lines. With ground runs or tracks, plan to drill them through in several places and solder short tinned-copper wire off-cut links on both sides (leaded component off-cut leads are ideal for this job).

This provides a low impedance ground to the copper side and also helps to anchor these tracks to the board's surface. Make sure you drill from the track side through to the copper side in case the drill bit, after passing through the board material, dislodges smaller or narrower foil tracks.

Photo 1: Packet of lead-light copper foil – 33 metres.

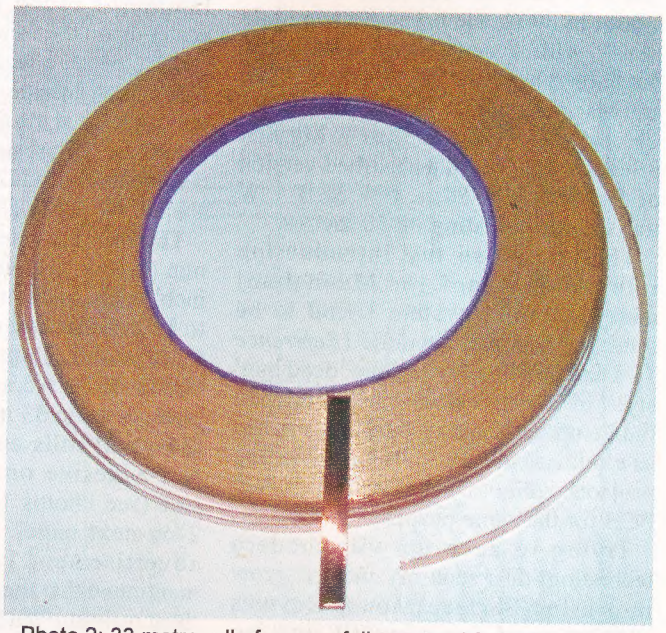

Photo 2: 33 metre roll of copper foil removed from packaging. It is suggested you leave it in the packet, or perhaps a zip lock plastic bag to reduce tarnishing of the foil.

Where possible, plan to use the full 4.76 mm foil strips, or if narrower tracks are required, use the maximum width you can – otherwise you will find the tracks may move as you apply heat from the soldering iron. If they do move, hold down one end with a small screwdriver, then move the track back into position before the self-adhesive backing cools and dries.

Whilst it is not necessary to tin the full length of most tracks, it does prevent further tarnishing of the foil.

However, you need to be *very quick* when tinning the tracks, using the lowest possible heat setting of your iron, otherwise they may lift off - but they can be easily repositioned using a small flat-bladed screwdriver or similar.

Once tinned, use the same screwdriver to again press the track firmly onto the board to ensure it has a good bond with the blank PCB surface. Use the minimum amount of solder and heat to prevent weakening or destruction of the adhesive.

I use tin/lead/silver solder, 0.71 mm in diameter – it is a little more expensive than standard resin cored 60/40 (lead/tin) solder, but wets more easily – you will also find that dry joints are probably a thing of the past when using this type of solder – and tinned surfaces appear to retain that nice shiny surface much better than normal solder; something well worth considering.

Continue to build up the tracks as necessary (*Photo 4*). I find that once I have started I usually place sufficient tracks for a few components, mount those components and move on to place additional tracks on the board – this way you will soon get a feel for the system and also to keep the overall project small and reasonably compact. You will be surprised just how small and compact you can make your projects with SMDs.

One problem I had with the project I built was that I should have mounted the SBL-3 ring mixer further down the right side of the PCB to allow for the addition of an MMIC amplifier to boost the 20 MHz LO signal – I will probably look into this later as it certainly will not take much to change it.

Remember you will be using SMDs so ensure the tracks you place are sufficiently close to ground tracks (or others) where components are to

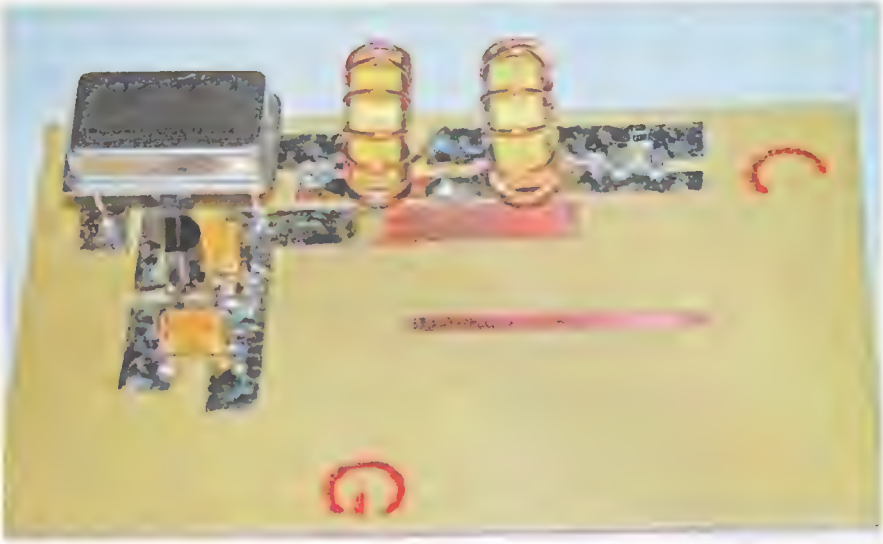

Photo 4: Further into the planning and building stage.

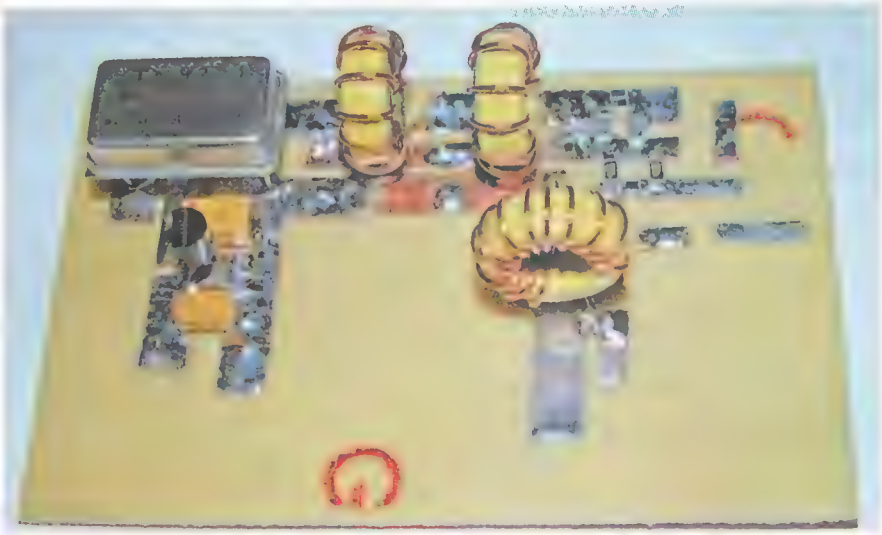

Photo 3: An example of using wide and narrow tracks – planning and building stage.

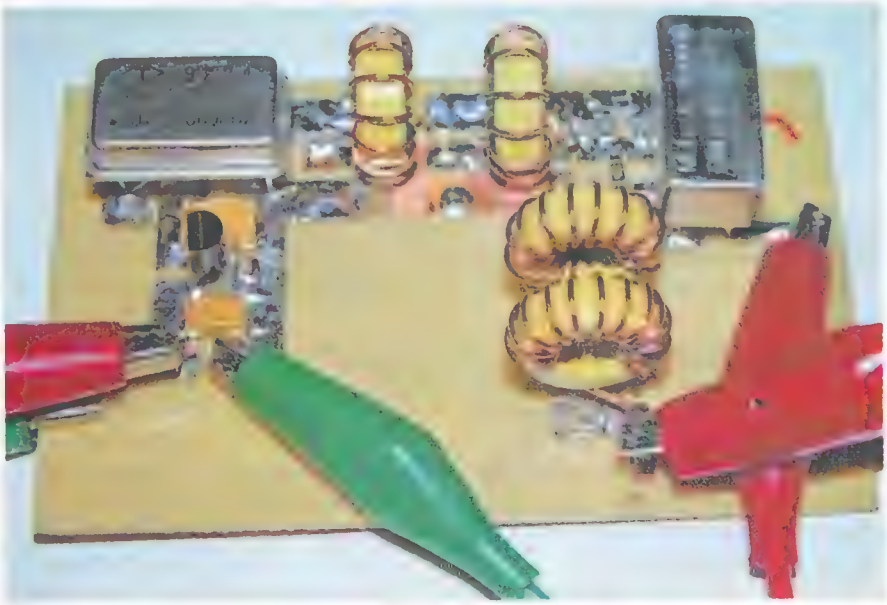

Photo 5: Finished project with test gear clips – note lifting of narrow track at the bottom of the photograph.

bridge between these tracks – I have successfully used this technique with 1206 and 0805 size SMDs.

I have not yet struck up sufficient courage to attempt 0603 size devices – I am frightened I will accidentally inhale these little devils.

However, I believe it would be possible to use them with this construction method. See Table 1 overleaf for the dimensions of common SMD resistors and capacitors.

Device size:	Length x Width (mm)	Comment
1206	3.2 x 1.60	Typical power rating ¼ W
0805	2.0 x 1.25	Typical power rating 1/10 or 1/8 W
0603	1.6 x 0.80	Typical power rating 1/16 W

Table 1 – SMD resistor and capacitor sizes and power ratings

Mounting components:

Because there are a great many tips available on the Internet regarding mounting and soldering SMDs I will not discuss this at any length in this article. Readers are encouraged to 'Google' for these sites.

Resistors and ceramic capacitors:

When placing SMD resistors and ceramic capacitors on the board, try to keep them nicely aligned and square – this is, however, easier said than done, especially with 0805 and smaller chips – and the main reason I try to stick with 1206 types where possible, not just because of their larger and more manageable size, but also because of their better power rating.

Electrolytic capacitors:

SMD electrolytic capacitors are available in a variety of different sizes depending on their value and working voltage.

In the simple signal generator extender circuit that I built for this construction article, I found small SMD tantalum types to be excellent – although not called for in the original circuit, their low leakage and small size made an attractive option.

Like all tantalums though, they are only available in relatively low values and working voltages, so choose them carefully.

You will note that I use tantalum capacitors (Photo 4) either side of the 5 V regulator (along with an SMD 0.1 μF chip capacitor on each side as well).

SMD transistors, diodes and integrated circuits:

These all come in various sizes – see Table 2 for a list of just some of the commonly available types. Please note that my signal generator extender project did not use any of these devices.

The closest I came was the use of a 5 volt regulator for the 20 MHz oscillator module but as I had a normal 'leaded' 78L05 in TO-92 style on hand, and no SMD equivalent, I decided to use that (see Photo 4).

I believe I would have had no problems in using one of the SOT regulators on this board though.

Typical Device Description:	Dimensions (mm)	Comment
Transistors: Small Outline Transistor (SOT)	3.0 x 1.75 x 1.3	Many different sizes and types available
Diodes: Small Outline Diode (SOD)	SOD-123: 3.68 x 1.17 x 1.60	Different sizes, including dual diode packages available
Integrated Circuits: Small Outline Integrated Circuit (SOIC)	8 or more pins, lead spacing 1.27mm	Just one of the many different sizes available

Table 2 – A small example of SMD transistors, diodes and ICs

Small two, three, or four legged devices should be relatively easy to mount using this copper foil type of construction. I would suggest, however, that prior to removing the backing paper, you trim down the end to be used for soldering the device on to, then extending the width out to a more usable size as it travels away from the component – that is, a narrower pointed end for the component mount, them becoming wider to provide maximum foil adhesion.

Multi-legged ICs and similar devices could be problematic for this type of paddy-board construction. However, Drew Diamond does suggest a great idea of using PCB substrate for mounting the small SOIC-8 pin types, such as the NE602 and similar (Reference 4). Use a small piece of PCB (with a suggested size of 20 x 20 mm), with four narrow hobby-type backsaw (used in balsa wood modelling) cuts (two of each) at 90° and 65°.

This substrate could then be super-glued or otherwise affixed to your PCB and used in that manner – if small SMD resistors and capacitors are required across various pins, these could be soldered directly to the substrate, with small jumper leads (or even copper foil strips) then used to wire this small sub-board into the rest of the circuit.

I have used this method in my modified TCF-80 TRX and found I could get away with using a 10-15 mm square PCB substrate with equally good results, and certainly less bulky than the larger size suggested.

For SMDs with more than 8 pins (for example, 10, 12, 14, 16, 18 pins) using this copper foil method, then either SMD 'chip carriers' (Reference 5) may be used as an intermediary mount with standard 2.5 mm (0.1 inch) pin separation, or alternatively, the 'dead bug' style (on their back and glued to the PCB). Short lengths of fine tinned copper wire could then be used to connect the various legs to nearby narrow pads of copper foil.

Some Caution Required:

I found that whilst it was easy to cut the copper foil into quite narrow strips, the narrow sections generally did not stick very well to the board after heat from the soldering iron had been applied. Long runs are not particularly bothersome, particularly if you do not tin the whole length of the run.

An alternative would be to remove the self-adhesive glue from the back of the foil (a clean, methylated spirit soaked rag does the job well) and resort to the standard PCB paddy-board system of using super glue or perhaps a *tiny* sliver of 'cold' hot-melt glue and use the soldering iron heat on the strip to melt the glue and hold the strip in place.

Similarly, because the bonding strength of the copper foil

contact backing is relatively weak, where you need to attach external wiring, often in the form of small pins or spigots (off-cuts of tinned copper wire), you will need to be careful not to apply too much lateral force to such wiring.

I found with my signal generator extender that small pins of tinned copper wire soldered to full width (5 mm) copper foil tracks were quite strong and withstood reasonable forces. However, when I attached a small alligator clip (from my spectrum analyser to test the finished project) to a test point soldered on to a very thin section of foil, it lifted free of the board (Photo 5).

I will replace that section with a 5 mm wide strip later on. Of course, when completely finished, I will ensure that any fly leads attached to the various test or voltage points are arranged so that no lateral forces are applied (easily achieved if the finished project is mounted inside a small diecast box).

Incidentally, my signal generator extender project took me a total of four hours, including the winding and measuring the LPF toroids, but now that I have a better idea of what to do I believe that time could be cut down to around three hours or less.

Some Tips:

Use minimal heat for all soldering – consider using solder with a silver content for excellent results.

Consider using the thicker 0.038 copper foil – it may be more tolerant to heat.

Overlap ground or other tracks that need to be lengthened or that change direction – then place a solder bridge over this joint to ensure an electrically continuous track.

Do not forget to drill several small diameter holes through to the copper foil side with ground tracks (and solder in short links) to provide a solid low impedance ground and assist with anchoring of the ground track – do this before you start mounting components.

Do not use jumper wires between separated ground tracks – you could end up with high impedance earthing points – and it will look untidy.

Use insulated wire jumpers for supply voltage tracks - it will be difficult to keep a continuous track with the adhesive foil strips.

Remember to keep track positions parallel and close to each other to allow for easy mounting and soldering SMDs between such tracks.

If you make a mistake, use a sharp pocket knife or small jeweller's screwdriver to lift up one end of a track and simply peel off – if you have to scrape the track off, be wary of small pieces that may create a short circuit.

Be careful of fine fragments of copper or solder if you use a sharp knife or flat screwdriver blade to restick tracks – could cause short-circuit problems.

I found that it was easier to make tracks longer than necessary, allowing for experimentation and trial and error component mounting – simply use a sharp pocket knife to cut through and lift off the unwanted track material.

This method of construction should prove ideal for designing PCB Microstrip lines – you will need to plug in the various thickness of the copper foil tape, copper side of the PCB and the dielectric material into the formulae that are around.

The copper foil would also be very usable for repairing missing or torn tracks on other equipment.

Take your time….

Summary

If you enjoy home-brewing and would like to try working with SMDs without resorting to dedicated PCB layout programs and PCB etching, or if you are finding that some leaded components are becoming scarce, then the construction method discussed in this article may be just what you need.

An additional benefit of using SMDs is price – I purchase most of mine from Rockby Electronics in batches (strips) of 100 for a cost of around 5 cents or less each. Used SMDs can also be ratted from unserviceable equipment quite easily – pop the boards in your pre-heated bench-top toaster oven (when the XYL is out shopping), then tap the board over a large piece of white paper – voila!

My thanks go to Mike VK4YNQ and Dick VK5BRH, for their valuable proofreading time, and Glenn VK4BG for feedback in the preparation of this article. Thanks also to Drew VK3XU for his excellent construction articles over the years – a great incentive to we home-brewers.

Sources

As this article is more about construction techniques, only basic supplier's information will be included:

PCB material and SMT components (to name but a few):

Rockby Electronics: http://www.rockby.com.au

Jaycar: http://www.jaycar.com.au

Altronics: http://www.altronics.com.au

Copper Foil: See *Reference 3* below. Any good leadlight suppliers in Australia.

Basic SMT size information: Wikipedia – Surface Mount Technology.

http://en.wikipedia.org/wiki/Surface-mount_technology

References:

1. "*Paddyboard circuit construction*", Drew Diamond, VK3XU, *Radio Projects for the Amateur*, Vol 4, 2008 pp 100-101.
2. Leadlight copper foil supplies – Adelaide Glass Centre – phone (08) 8363 0766: http://www.adelaideglasscentre.com.au/
3. "*Signal Generator Extender*", Wes Hayward, W7ZOI, et al, in "*Experimental Methods in RF Design*" published by ARRL, 2003, p7.16
4. "A "*Paddyboard' substrate for popular 8-pin surface mount chips*", Drew Diamond, VK3XU, *Radio Projects for the Amateur*, Vol 4, 2008 p102.
5. For SOIC SMD carriers:

http://www.ezprototypes.com/ChipAdapterSocketsMain.php

Author:

Peter Whellum, VK5ZPG, lives near Quorn, South Australia and can be contacted on email pwhellum@bigpond.com or telephone (08) 8648 6504.

ar

Gridsquare Standings at 16 October 2009

144 MHz	Terrestrial	
VK2FLR	Mike	113
VK3NX	Charlie	106
VK2KU	Guy	102
VK3PF	Peter	88
VK3HZ	David	85
VK2ZAB	Gordon	78 SSB
VK2ZT	Steve	76 SSB
VK5AKK	Phil	76 SSB
VK2DVZ	Ross	75 SSB
VK3PY	Chas	72 SSB
VK3CY	Des	71
VK2EI	Neil	63
VK3BDL	Mike	63 SSB
VK7MO	Rex	63
VK2TK	John	62
VK3QM	David	62 SSB
VK3BJM	Barry	61 SSB
VK3II	Jim	56
VK3II	Jim	55 SSB
VK3WRE	Ralph	55 SSB
VK3PF	Peter	54 SSB
VK3ZLS	Les	51 SSB
VK5BC	Brian	48 SSB
VK4CDI	Phil	47
VK3CAT	Tony	46
VK3VG	Trevor	46 SSB
VK7MO	Rex	45 SSB
VK2AMS	Mark	44 SSB
VK4CDI	Phil	43 SSB
VK4KZR	Rod	43
VK7MO	Rex	43 Digi
VK5BC/p	Brian	42 SSB
VK3PF	Peter	39 Digi
VK4TJ	John	37 SSB
VK2TK	John	35 SSB
VK2KOL	Colin	34 SSB
VK3DMW	Ken	34
VK6HK	Don	34
VK3EJ	Gordon	33 SSB
VK3ZUX	Denis	33 SSB
VK2TG	Bob	32 SSB
VK1DA/p	Andrew	31
VK3VHF	Rhett	29 SSB
VK1WJ	Waldis	27
VK2EAH	Andy	27
VK2TK	John	27 Digi
ZL3TY	Bob	24
VK3TLW	Mark	23 SSB
VK4EME	Allan	23
VK1WJ	Waldis	22 Digi
VK3BG	Ed	22 SSB
VK3II	Jim	21 Digi
VK3ECH	Rob	20 SSB
VK4CDI	Phil	20 Digi

144 MHz	Terrestrial	
VK6KZ	Wally	20
VK4EME	Allan	19 SSB
VK3AL	Alan	18 SSB
VK3UDX	Geoff	17 SSB
VK2EAH	Andy	16 SSB
VK6KZ/p	Wally	16
VK3VHF	Rhett	12 Digi
VK4EME	Allan	12 Digi
VK2EAH	Andy	11 Digi
VK2EI	Neil	11 Digi
VK2KOL	Colin	9 Digi
VK2ZT	Steve	8 Digi
VK1WJ	Waldis	6 SSB
VK6DXI	Mirek	6
VK6HK	Don	6 Digi
VK1WJ	Waldis	5 CW
VK4AIG	Denis	5 SSB
VK4JAZ	Grant	3 FM
VK3QM	David	1 Digi

144 MHz	EME	
VK2KU	Guy	356
VK2KU	Guy	341 Digi
ZL3TY	Bob	300
VK3AXH	Ian	252 Digi
VK4CDI	Phil	182 Digi
VK7MO	Rex	155 Digi
VK2FLR	Mike	120
VK3CY	Des	70 CW
VK2AWD	David	65 Digi
VK2KU	Guy	43 CW
VK3DDU	Paul	39 Digi
VK2ZT	Steve	28 Digi
VK3VHF	Rhett	20 Digi
VK3HZ	David	19
VK3II	Jim	14 Digi
VK3NX	Charlie	5
VK4EME	Allan	5 Digi
VK3AXH	Ian	3 CW
VK2DVZ	Ross	2 CW
VK3AXH	Ian	1 SSB

432 MHz	Terrestrial	
VK2ZAB	Gordon	57 SSB
VK3NX	Charlie	50
VK3PY	Chas	50 SSB
VK3QM	David	48 SSB
VK3ZLS	Les	40 SSB
VK2KU	Guy	38
VK3BJM	Barry	38 SSB
VK3HZ	David	38
VK5AKK	Phil	38 SSB
VK2DVZ	Ross	34 SSB
VK3BDL	Mike	32 SSB

432 MHz	Terrestrial	
VK3CY	Des	32
VK3WRE	Ralph	32 SSB
VK2ZT	Steve	30 SSB
VK3PF	Peter	30
VK3PF	Peter	29 SSB
VK5BC	Brian	25 SSB
VK1DA/p	Andrew	24
VK3VG	Trevor	20 SSB
VK7MO	Rex	20
VK3UDX	Geoff	19 SSB
VK2TK	John	18
VK7MO	Rex	18 SSB
VK2TK	John	17 SSB
VK3CAT	Tony	16
VK5BC/p	Brian	16 SSB
VK2AMS	Mark	15 SSB
VK3BG	Ed	15 SSB
VK3TLW	Mark	15 SSB
VK3ZUX	Denis	15 SSB
VK4KZR	Rod	15
VK4CDI	Phil	14
VK4CDI	Phil	14 SSB
VK6KZ	Wally	13
VK2EI	Neil	12 SSB
VK2KOL	Colin	12 SSB
VK2TG	Bob	10 SSB
VK3AL	Alan	10 SSB
VK3ECH	Rob	10 SSB
VK3VHF	Rhett	9 SSB
VK4TJ	John	9 SSB
VK6KZ/p	Wally	8
VK7MO	Rex	7 Digi
VK2FLR	Mike	6
VK3DMW	Ken	6
VK4EME	Allan	6 SSB
VK6DXI	Mirek	6
VK1WJ	Waldis	4 SSB
VK2EAH	Andy	4 SSB
VK3PF	Peter	4 Digi
VK3PY	Chas	4 Digi
VK3QM	David	4 Digi
VK4CDI	Phil	4 Digi
VK3VHF	Rhett	3 Digi
VK4AIG	Denis	3 SSB
VK4JAZ	Grant	3 FM
VK2KOL	Colin	1 Digi
VK2TK	John	1 Digi
VK2ZT	Steve	1 Digi

432 MHz	EME	
VK4KAZ	Allan	14 CW
VK4CDI	Phil	13 Digi
VK7MO	Rex	10
VK7MO	Rex	9 Digi

432 MHz	EME	
VK3NX	Charlie	5
VK3HZ	David	4
VK3AXH	Ian	2 Digi
VK2ZT	Steve	1 Digi
VK3VHF	Rhett	1 Digi
VK5BC	Brian	1

1296 MHz	Terrestrial	
VK3PY	Chas	39 SSB
VK3QM	David	39 SSB
VK3NX	Charlie	37
VK2ZAB	Gordon	29 SSB
VK3ZLS	Les	26 SSB
VK2KU	Guy	25
VK2DVZ	Ross	23 SSB
VK5AKK	Phil	22 SSB
VK3PF	Peter	20
VK3BJM	Barry	19 SSB
VK3KWA	John	19
VK3PF	Peter	19 SSB
VK3BDL	Mike	17 SSB
VK3HZ	David	17
VK3WRE	Ralph	17 SSB
VK3VG	Trevor	12 SSB
VK4KZR	Rod	12
VK2ZT	Steve	11 SSB
VK3BG	Ed	11 SSB
VK7MO	Rex	11 SSB
VK1DA/p	Andrew	10
VK2TK	John	10 SSB
VK3UDX	Geoff	10 SSB
VK3TLW	Mark	8 SSB
VK3AL	Alan	7 SSB
VK3DMW	Ken	7
VK3ECH	Rob	6 SSB
VK2AMS	Mark	5 SSB
VK3VHF	Rhett	5 SSB
VK3ZUX	Denis	5 SSB
VK4TJ	John	5 SSB
VK5BC	Brian	5 SSB
VK6KZ/p	Wally	5
VK4CDI	Phil	4
VK4CDI	Phil	4 SSB
VK6KZ	Wally	4
VK4EME	Allan	3 SSB
VK5BC/p	Brian	3 SSB
VK6DXI	Mirek	3
VK7MO	Rex	3 Digi
VK2FLR	Mike	2
VK3CY	Des	2
VK3PF	Peter	2 Digi
VK3QM	David	2 Digi
VK4AIG	Denis	2 SSB
VK4CDI	Phil	1 Digi
ZL3TY	Bob	1 SSB

1296 MHz	EME	
VK3NX	Charlie	29
VK7MO	Rex	29
VK7MO	Rex	26 Digi
VK4CDI	Phil	20
VK4CDI	Phil	19 Digi
VK4CDI	Phil	2 CW

2.4 GHz	Terrestrial	
VK3PY	Chas	17 SSB
VK3QM	David	16 SSB
VK3NX	Charlie	15
VK3WRE	Ralph	11 SSB
VK3PF	Peter	7 SSB
VK3HZ	David	5
VK4KZR	Rod	4
VK6KZ	Wally	4
VK3BJM	Barry	3 SSB
VK1DA/p	Andrew	2
VK3PF	Peter	2 Digi
VK3VHF	Rhett	2 SSB
VK2AMS	Mark	1 SSB
VK2DVZ	Ross	1 SSB
VK2EI	Neil	1 SSB
VK3BG	Ed	1 SSB
VK3TLW	Mark	1 SSB
VK3ZUX	Denis	1 SSB

2.4 GHz	EME	
VK3NX	Charlie	28
VK7MO	Rex	9
VK7MO	Rex	7 Digi

3.4 GHz	Terrestrial	
VK3QM	David	13 SSB
VK3NX	Charlie	12
VK3WRE	Ralph	8 SSB
VK3PF	Peter	6 SSB
VK6KZ	Wally	4

3.4 GHz	EME	
VK3NX	Charlie	11

5.7 GHz	Terrestrial	
VK3NX	Charlie	12
VK3QM	David	11 SSB
VK3WRE	Ralph	9 SSB
VK3PF	Peter	7 SSB
VK6KZ	Wally	4
VK3BJM	Barry	2 SSB
VK3PF	Peter	2 Digi
VK6BHT	Neil	2 SSB
VK3ZUX	Denis	1 SSB

5.7 GHz	EME	
VK3NX	Charlie	11

10 GHz	Terrestrial	
VK3PY	Chas	14 SSB
VK3QM	David	13 SSB
VK3NX	Charlie	12
VK3PF	Peter	9 SSB
VK3WRE	Ralph	9 SSB
VK6BHT	Neil	9 SSB
VK3HZ	David	7
VK6KZ	Wally	5
VK3TLW	Mark	3 SSB
VK2EI	Neil	2 SSB
VK3BJM	Barry	2 SSB
VK3DMW	Ken	2
VK3ZUX	Denis	2 SSB
VK4KZR	Rod	2
VK7MO	Rex	2
VK1DA/p	Andrew	1
VK3BG	Ed	1 SSB

10 GHz	EME	
VK3NX	Charlie	13

24 GHz		
VK6BHT	Neil	3 SSB
VK2EI	Neil	2 SSB
VK3NX	Charlie	2
VK6KZ	Wally	2

474 THz		
VK3WRE	Ralph	3
VK3HZ	David	2
VK7MO	Rex	2
VK7MO	Rex	2 Digi
VK7TW	Justin	2
VK7HAH	Ben	1 Digi
VK7TW	Justin	1 Digi

Additions, updates and requests for the guidelines to Guy VK2KU. The guidelines (and the latest League Table) are also available on the VK VHF DX Site at www.vhfdx.radiocorner.net - click on Gridsquares. Next update of this table will close on or about 12 February 2010.
Stations who do not confirm their status for more than 12 months may be dropped from the table.

"Hey, Old Timer..."

If you have been licensed for more than 25 years you are invited to join the

Radio Amateurs Old Timers Club Australia

or if you have been licensed for **more than ten years**, you are invited to become an **Associate Member** of the RAOTC.

A **$5.00** joining fee plus **$8.00** for one year or **$15.00** for two years gets you two g OTN Journals a year plus good fellowship.

Write to RAOTC,
PO Box 107
Mentone VIC 3194

Taming the SMPS beast

Ian Cowan VK1BG

A purchased SMPS was found to be practically useless for many applications because there were birdies generated right across the MF and HF spectrum.

In the March 2008 issue of this magazine, Drew Diamond VK3XU described a method of reducing the RF noise emission from a low cost commercially available switch mode power supply. Drew commented that his technique considerably reduced the strength of the noise.

The level of noise suppression achieved by Drew would be adequate for most purposes, but falls short of the needs of the most demanding environments.

Introduction

I have a caravan with a broadcast receiver installed which is frequently used for listening to distant broadcast stations such as 3WV on 594 kHz. The radio has hitherto been powered by a quiet linear power supply. The radio works well provided the ambient noise level is low.

A couple of years ago I saw advertised in the Jaycar catalogue a small SMPS rated to deliver 13.8 volts at 20 amps. In spite of its much higher output rating, it is actually lighter than the linear supply.

As a bonus, the SMPS also seemed to be about right to power my FT-897 which I sometimes take away with me, and which I had until then powered from a lash up supply to keep the weight down.

I hot footed it to our local store and talked to the man there about it. I asked about the noise levels generated by the unit, but he would offer no guarantees about the suitability of the SMPS for my purpose. Fair enough.

In due course I decided to take the plunge, and bought one. It turned out that the SMPS matched my worst fears. There were birdies right across the MF and HF spectrum, so the unit was useless for my purpose.

However in other respects it seemed fine, as it delivered rated output with good regulation and no sign of overheating. It has a built in fan, and this operates in an unusual manner, in that the fan speed seems to be modulated by the output load current. Slow for light loads, fast at 20 amps. And it is quiet.

So I decided to put some effort into getting rid of the RFI.

Warning

Switch Mode Power Supplies [SMPS] can carry lethal voltages. Also equipment using SMPSs regularly uses hot chassis construction, that is the chassis operates at a high voltage and so is not earthed. They [the power supplies] should not be worked on without protective equipment, both electrical and physical. Components have been known to shatter during testing. Precautions require that under no circumstances should it be possible to touch or be in contact with a working supply; especially by accident.

The SMPS is not a beginner's project.

A Little Theory

SMPS power supplies are by nature prolific generators of RF noise, and the reason for this is not hard to see. A typical small cheap SMPS delivers

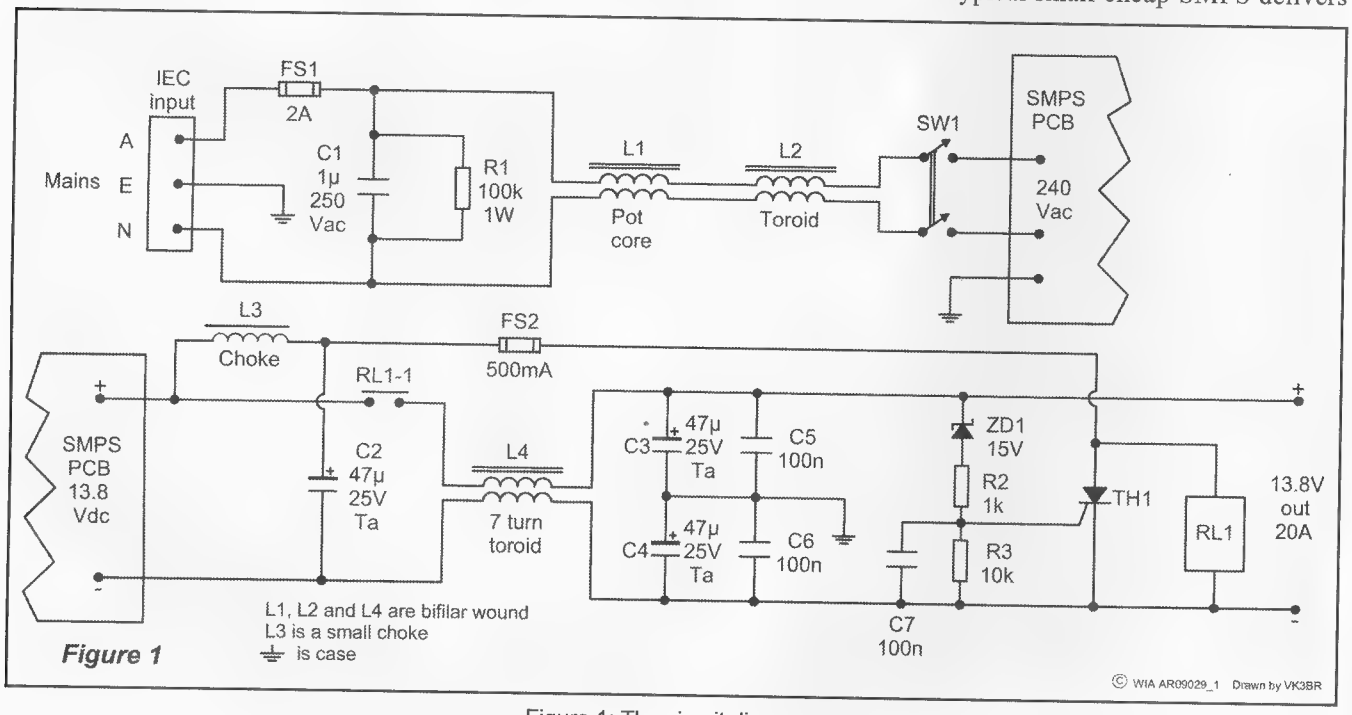

Figure 1: The circuit diagram.

the mains input direct to a high voltage bridge rectifier via some rudimentary filtering. The bridge rectifier then charges a large electrolytic capacitor to something like 340 volts DC for units used in Australia.

Also connected to this electrolytic is a fast power switch – usually a power MOSFET – which switches at a frequency upwards of 50 kHz. This switch operates at a short mark to space ratio (that is, the "on" time is much less than the "off" time), so that the average value of the output of the switch is much less than the voltage across the main electrolytic. This very spikey waveform then passes to a ferrite cored transformer for processing into regulated DC, and that is where we will leave it.

The main bridge rectifier operates from the 50 Hz mains, so it moves into conduction 100 times every second. During the "on" time of the rectifier the main electrolytic is connected direct to the mains input via an effective resistance of only a few ohms.

Now while this is happening, the high speed switch is also belting away at a much higher frequency – its operation modulates the voltage across the electrolytic and this modulation influence also appears across the mains for as long as the input rectifier is in conduction. Thus the mains supply becomes the bearer of a nasty complex RF waveform which is rich in the harmonics of the mains frequency, the high speed switch frequency, and the intermodulation products of all these frequencies.

Now you may think that the main electrolytic, which might be rated at 470 µF, or so, would be big enough to prevent the DC voltage across it from being modulated by the high frequency switch. Unfortunately these units typically have high internal resistance to high frequencies, so they are pretty useless as filters.

From the above it can be seen that cheap SMPS tend to noise modulate the voltage between the active and neutral of the incoming supply mains, and this form of noise is known as normal mode noise.

This is the most copious form of noise coming from most cheap SMPS, and is also the hardest to deal with, as it appears in a lethally dangerous environment.

The DC output from the SMPS is derived from a high frequency rectifier which is followed by a simple filter arrangement of limited efficiency. Thus there is also plenty of residual normal mode noise between the positive and negative output wires.

A second form of noise – known as common mode noise – is also conspicuous in cheap SMPS units. This is noise transferred by stray capacitive and inductive coupling into the mains and output circuits.

With a little reflection it is realized that the RF power level of the fast switch must be quite high, so cross coupling of significant levels of noise is readily achieved. Common mode noise appears across both wires of the incoming mains more or less equally in both amplitude and phase, as it also does on the positive and negative of the output.

From the above it can be seen that both common mode and normal mode noise must be dealt with at both the input and the output if a cheap SMPS is to be silenced.

Warning

Before I go further into this, I must issue a warning to anyone tempted to modify an SMPS along the lines I am about to describe. An SMPS is a very dangerous piece of equipment to work on. Circuits carrying mains voltages are involved, and in addition there is a large filter capacitor which may be packed with energy at over 300 volts DC.

There is enough charge contained here to cause instant death to the ignorant or careless. Do not attempt to modify such a supply unless you are fully aware of the safety procedures necessary for this work.

Method

The SMPS I bought was built into a small metal and plastic box which did not show much promise as an RF shield, do I decided to ditch it. I removed all the components from the case for future reuse. This included the main PCB of the supply, the fan, and the sundry terminals and components.

I then made up an aluminium box 260 x 200 x 80 millimetres using Al sheet and angle, and pop riveted all but the top together. These dimensions were chosen to match the FT-897, so the transceiver could sit upon the SMPS when set up.

I nominated one end of the box as the front, and drilled a series of 6 mm holes towards the front end of each of the side panels. These are to provide for ventilation when the fan is running. In the front panel is installed the mains switch, "Power On" LED and output terminals.

On the other end I mounted my standard Molex type connector (to power the FT-897), the fan, an accessory outlet, the mains fuse, and an IEC type mains inlet socket with integral EMC filter. This inlet socket is of the same type as used by Drew Diamond (like Jaycar Cat No. MS4003).

The main SMPS PCB was then installed into the bottom of the box, towards the front, on insulated standoffs. The original SMPS was configured for floating output – neither the positive nor negative sides of the DC output were grounded, and I decided to keep this configuration in the interests of reducing the number of earth loops in the installation.

The circuit arrangement inside the box is shown in Figure 1 and the physical arrangement is shown in the photographs. These show views from the front, Photo 1, and rear, Photo 2, of the unit.

The main PCB is in two parts – mains input and DC output – and these are well isolated from each other. They remain well isolated in the additional filtering - all external to the main PCB - which I have provided.

The mains supply enters via the IEC filtered connector and fuse FS1. The active and neutral wires are then wound together in bifilar fashion firstly through an old pot core (one turn) to form L1, and then twice through a 30 mm toroid to form L2.

The A and N wires then connect to the mains switch and PCB in the usual way. L1 and L2 provide a considerable amount of common mode noise suppression at RF, but do nothing for the normal mode component. This is dealt with by C1, a 1 µF 250 VAC mains rated capacitor scrounged from an old PC switch mode supply, and it is very effective in removing the normal mode component. F1 protects against possible failure of C1 or the main PCB, whilst R1 is there to discharge C1 for safety reasons. With this set up, noise levels injected into or carried by the mains are very low.

The DC output from the main PCB also has some degree of filtering on the main PCB but it is not enough.

As can be seen from Figure 1, a filtering set up very similar to that suggested by Drew Diamond is used. L4 comprises a 40 mm ferrite core toroid which has seven turns of heavy duty twin core flexible speaker cable wound through it.

As Drew describes, running the positive and negative leads through the toroid together prevents core saturation yet, in conjunction with C3 – C6 provides good suppression of the common mode noise components. These capacitors also suppress the normal mode noise components.

For the sake of completeness, Figure 1 also shows the circuit of a crowbar type over voltage protection arrangement in my SMPS. I doubt the need for this – it seems that unlike linear power supplies, it is very rare for an SMPS to produce an over voltage failure.

Some notes on the constructional aspects might be in order. First, there is only one connection point on the box, and to this are connected the earth pin on the IEC connector, the centre point of the C3 – C6 capacitors, and the earth point of the main PCB.

This single point earthing arrangement prevents the flow of RF currents in the metalwork of the case, and so, radiation from the case. Next, all capacitors larger than 1 μF are of the tantalum type – these are more effective as RF bypasses than the ordinary Aluminium foil variety. The smaller capacitors are polyester type.

Finally, the DC side of the main PCB must not be connected to the case – to do so would short out L4 at RF, and ruin the common mode suppression of the unit. , However it is OK to ground either side of the output of the SMPS.

Outcome

The results of the effort described above have been excellent. Under working conditions there is no detectable noise produced by the SMPS from the bottom end of the AM broadcast band through to the 10 metre amateur band.

This is a very satisfying result, and I now have no concerns about operating the SMPS in any environment where RF noise might be an issue. **ar**

Photo 1: The unit as viewed from the front.

Photo 2: The unit as viewed from the rear.

Horkheimer Prize 2010

Rudolf Horkheimer was one of the first radio amateurs in Germany. His name is synonymous with the active amateur, who earns merit in amateur radio in a selfless manner.

The prize bearing his name is awarded by DARC (Deutscher Amateur Radio Club) for merits of amateur radio, its further development and the targets of DARC. The prize can be awarded to one or more persons or institutions and is not restricted to members of DARC. Any member of an amateur radio society in the IARU may apply. Self-proposals are permitted.

The prize is an etched glass-sheet and cash for non-personal use. This money may be spent for promotion of amateur radio at the discretion of the receiver.

The prize is awarded during the opening of HAM RADIO 2010 fair in Friedrichshafen, Germany.

Proposals must be submitted by March, 31st 2010 to DARC, Lindenallee 4, 34225 Baunatal, Germany or via E-Mail: darc@darc.de. The proposal shall list contact details of the proposed amateur, a short substantiation. Further informatio may be sought.

The decision of the jury is final and cannot be challenged. Should no suitable candidate be suggested, the prize will not be awarded in the year. **ar**

The VK9NI Norfolk Island DXpedition 2009

Allan Mason VK2GR and Tommy Horozakis VK2IR

The DXpedition was originally planned by the Hellenic Amateur Radio Association of Australia to use the call of VK9AAA. The callsign was changed to VK9NI three weeks prior going to air, because the VK9NI call became available, and we felt it important for the DX community to better identify the geographic location of the expedition.

An advance party of Teamleader Tommy VK2IR, Peter VK3FGRC and Keith VK3FT arrived on Sunday 19 July to erect the antennas. A delay with customs had put them a day behind. The remainder of the party Peter VK2FPGR, Raffy VK2RF, Allan VK2GR, Chris VK3FY, Tony VK3TZ, and Andrey VK5MAV arrived on Wednesday 22 July, to find Spider beams and low band verticals erected and operational stations ready to go.

Many antennas

Two Spider beams 10 metres high for 20, 17, 15, 12, and 10 metre bands. Refer Reference 2.

A 40 metre two element beam at 12 metres, on an aluminium tower.

An 18 metre high twin lead Marconi vertical with 16 radials for 80 metres. Refer Reference 3.

An 18 metre high twin lead Marconi vertical with 16 radials for 160 metres. Refer Reference 3.

Dipoles for 6 metres, 17 metres, 30 metres and 40 metres.

Two 200 metre long Beverage receive antennas for the low bands.

While all of the antennas performed well, of particular note was the 40 metre two element beam that was fantastic for receive and transmit even after a few elements of the capacity hat were broken and bent - a quick repair by Tommy and we were in business again.

A rotator motor would have been great when it was raining but you have never seen hams run so fast when the DX is on and, of course, the pouring rain also made them move rather quickly. The low band verticals were great for transmit and receive although after a few days, Tony set up two Beverage

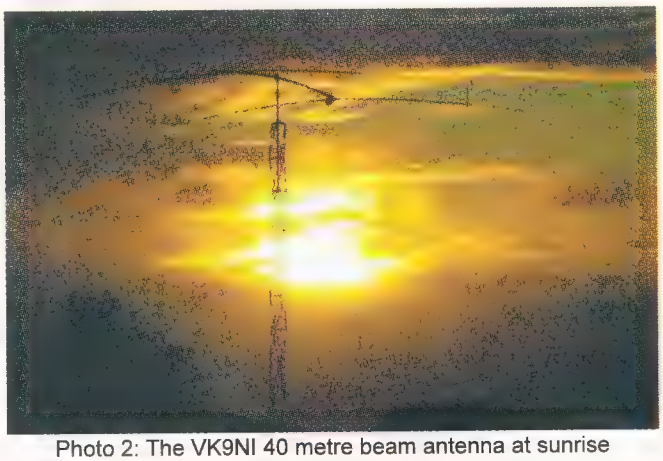

Photo 2: The VK9NI 40 metre beam antenna at sunrise

Photo 1: Team photo with VK9NI banner and T-shirts prominently placed.

Photo 5: Raffy VK2RF

antennas that considerably improved the receive capability on both 80 and 160 metres. Unlike our city environments, the band noise level on the island was below S1 most of the time.

One morning, at about 3 a.m. the 160 metre vertical stopped working. In daylight next morning we found it tilted over at a precarious angle and on investigation, found that a tractor had broken some of the guy cords for the 18 metre squid pole and cut up many of the ground radials. The low band antenna team set to work and had the antenna operational again by sunset.

The station antennas were erected on the northwest tip of Norfolk Island, 112 metres above sea level, over soft, rich, red volcanic soil. Due to the rocky cliffs, no beaches were available for a salt water antenna erection at that part of the island.

The equipment

Comprised four IC-7000 transceivers, four HF linear amplifiers, two RTTY interfaces, and a pile of power supplies

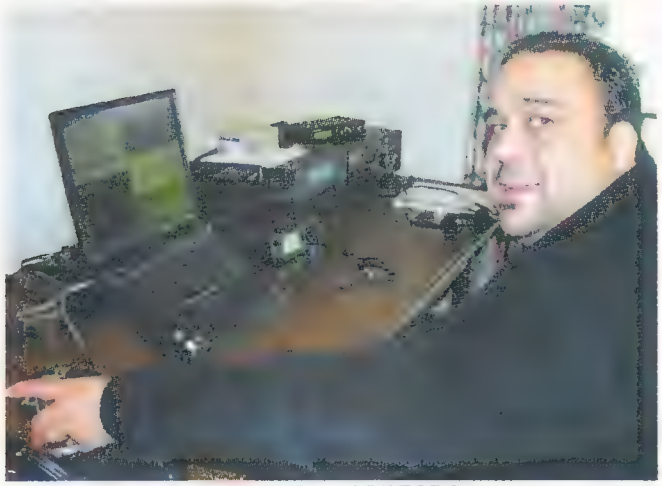

Photo 4: Peter VK3FGRC

Photo 3: Allan VK2GR

Photo 6: The VK9NI team with sponsor's flag from Icom.

and cables. Standby radios were another IC-7000, an IC-706 and a Yaesu FT-897D.

Although propagation prediction was considered to be poor, the nine operators were kept busy most of the time – however all bands did die on a couple of mornings.

In the pileups, the JA discipline was excellent, the North Americans reasonable while many of the European stations just kept calling even though it was obvious that they could not hear us. Unfortunately, as is often heard with DXpedition stations, there was considerable jamming activity on the CW frequencies.

The IOTA contest was entered with the callsign VK9IR, due to the single transmitter contest rules. This allowed the other stations to continue operating as VK9NI on the other bands. Some 650 IOTA contest QSOs and 227,448 contest points were realised.

The last 80 metre QSO on our departure date was with EA8, about 40 minutes after sunrise. This is a very respectable distance for this band, of 19,700 km.

Many team members were concerned about the lowering of the 40 metre beam and tower. We were fortunate that the lowering was incident free prior to the rain commencing. Believe it or not the aluminium 40 metre tower was dissembled into a package one metre long and 1/3 metre round.

The cost for this DXpedition was over $30,000. Many thanks go to the sponsors who assisted defraying some of this cost for the participants. The Sponsor list comprised The Hellenic Radio Club of Australia, ICOM, WIA, Norfolk Air, Strictly Ham, The Pest Control Company, Step IR, Rippletech Electronics, Spiderbeam, Viking Fleet, HQ Antennas, West Mountain Radio, AT Electronic and Communication International, G3LIV Interfaces for Data nodes and the Amateur Transceiver Centre Sydney.

A post expedition review by Chris summed it up well and is repeated here with minor changes and additions – it was great to have spent a week in the company of you all; from our experience and considering the band conditions were not in the best shape, we did extremely well; the team deserves a good pat on the back; everyone played a part in making this an extremely successful Norfolk Island IOTA OC-005 activation.

The Positives

The cooks were great, and the low band verticals worked a treat. The use of a two element 40 metre beam was a gutsy move, but the results speak for themselves. Spiderbeams work great, and the SPE 1k-FA amplifiers proved their worth on this trip and the other amplifiers worked as expected. A big thank you goes to the CW operators (yes, more CW contacts than all the others) but especially to Andrey and Allan, the main CW operators.

Overall contacts across all modes totalled 12,000 plus, not a bad effort, and having openings on all HF bands, even if only for a short while on some bands, was satisfying.

The Negatives

We underestimated the popularity of RTTY, and there were not enough CW operators. The band conditions were poor, to say the least, and we had no antenna rotators.

The Learnings

We need to look at having a dedicated RTTY station on any future activation, with a multiband antenna. A greater antenna separation and geographically separated operating stations would better assist in activating CW, SSB and RTTY operation on the same band.

Conclusion

Good planning, a lot of hard work prior to and during the DXpedition, and many operating hours by the team realized some 12,000 QSOs at a time of very poor propagation.

Anyone considering VK9N, we suggest it would be hard to go past Pacific Palms, refer Reference 4. There is plenty of antenna room and many Norfolk Island pine trees available to string with wire antennas.

QSL cards for this expedition go to VK3HR.

To all the team, thank you for your specialty expertise and for making this VK9NI activation memorable. Where and when is the next activation?

References

1. http://www.vk9ni.com/ http://www.clublog.org/charts/?c=VK9NI#r
2. Spiderbeam http://www.spiderbeam.com/home/index.php
3. Simple, Low-Cost, Wire Antennas by William Orr, W6SAI, ISBN 0-933616-02-3 page 104
4. Pacific Palms, Norfolk Island http://www.norfolkisland.com.au/accom_result1/pacific-palms/

ar

"Amateur Radio Gives You Two Million Friends"

A Review of an eBook by Stan Gulich SM7WT

Al Shawsmith ex VK4SS

The latest to enhance the literary world of AR is a great CD titled as above, and great it is in every sense of the word.

It has been produced by well known author Stan Gulich SM7WT. The subject matter would fall within the parameters of contemporary personal history. As a book it will be over 1000 A4 pages with photos lavishly scattered throughout. Over 200 internationally known hams, authors, journalists, writers and others have come together to contribute a wide diversity of stories, events, dramas, traumas and adventures. The resultant book would need to be printed in three or more volumes.

Who knows - a work of this size may never be published again.

The author Stan SM7WT says the media and postal costs in Sweden are outrageous: e.g. to cash a foreign bank cheque is approximately US$11.00, so payment by cheque is not offered. So it will have to be electronically transferred or green stamps. In our case, one Australian 'stamp' coloured red should cover the cost.

Why did an amateur sacrifice two thousand DXing hours to assemble ARGYTMF? Only SM7WT can answer this question. As a private service, we all know the need for more and better PR. Perhaps ARGYMTF will fill this void.

Over time this great book will find its way into all the pertinent libraries and homes of the planet.

73 Al Shawsmith Ex. VK4SS.
WIAQ historian (retired).

Details can be found at: http://www.qsl.net/dl7cm/SM7WT/sm7wt.htm ar

Part 1 of 3

A complete 8 MHz IF system for USB, LSB and CW for a HF transceiver

Peter Wathen VK3EPW

This is the first of three articles describing the workings and construction of a complete HF transceiver IF system. It is a part of a HF transceiver that I am currently using that covers the 80 m, 40 m, 30 m and 20 m amateur bands for SSB and CW operation.
Circuit diagrams are also provided, refer Figures 1 and 2. I hope to describe the rest of the transceiver later.

Why present the IF system first? Because it can be used in any transceiver that is intended for the SSB or CW mode of operation; it is the universal part of a transceiver. If you want to home brew a transceiver this is the place to start, the exciting part that you can hear and see working (on an oscilloscope).

So what are the three parts:

1. The BFO or carrier oscillator module.
2. The crystal filter module (mounted on the IF board).
3. The complete IF module, RF to speaker, microphone to SSB, or CW send to RF carrier generation.

I have a logical reason for presenting them in this order. The BFO carrier module is a stand-alone boxed up module and will be a useful signal source for testing and debugging if you do not have a signal generator. Some 50 Ohm step attenuators will be needed to use it as a signal generator for the IF strip; these are easily made, with just three resistors. The ARRL Handbook gives values for PI and T network step attenuators of various dB values and, of course, I am sure you will find them on the Internet somewhere.

Hopefully you have the circuits for the BFO module in sight. Refer Figure 1 and 2.

The circuit is comprised of three distinct sections, crystal oscillators (Figure 2), logic supply switching and the supply regulators (Figure 1).

The easy part first. The supply regulators are three pin (through hole) regulators. A 78L05 regulator is used for the five volt supply as it is only powering one 74HC00 IC (again through hole) with 3k3 pull up resistors and 5k6 output resistors.

There will be very little current drain from this device, well below the 100 mA maximum of the 78L05. The 7808 is probably a little bit of overkill for the eight volts to the oscillators but that is a good thing, trust me.

The construction note here is to make sure you locate the 10 uF 35 V solid tantalum surface mount capacitors and the 0.1 uF surface mount capacitors on both the input and output pins as close as possible to those pins, as shown on the circuit diagram. Locate the two regulators close together so they can share C50 and C44 - again as shown on the circuit diagram. I tend to draw a circuit diagram as I would lay out the circuit board, as it makes it easy to do the layout and easy to follow the circuit on the board when fault finding.

The next part of the circuit is the logic switching circuit. It is designed to be driven from a computer output port. The gates are all used as simple inverters, the 150 Ohm resistors are just there to give a little protection to the inputs. All three gates have their inputs tied to five volts through 3k3 resistors which makes the output of the gates close to zero volts. This results in the respective NPN

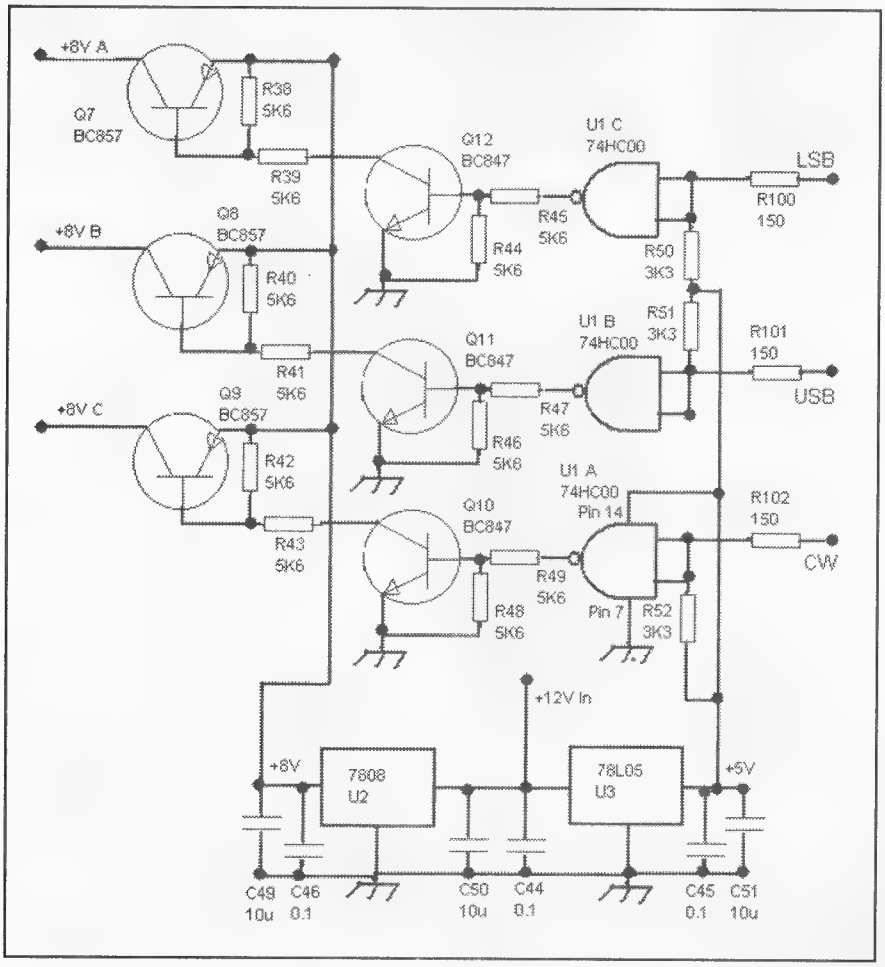

Figure 1: Circuit for BFO module.

(BC847) transistors to be biased off or non conducting.

If, for example, the CW input were then grounded, the output of U1 A will become five volts, which will forward bias Q10, causing it to draw current through R42 and R43, that will drop the potential of the base of Q9 BC857 (PNP), causing it to pass current and provide a +8 volt supply to the collector, which is connected to the CW crystal oscillator.

All three inputs work on exactly the same principal (they are the same circuit). Obviously, only one input should be taken to zero volts (ground) at a time.

Now, for the slightly more complicated part of the circuit, the crystal oscillators. Refer Figure 2. The first thing you will see is that there are three circuits consisting of essentially the same thing so I expect someone to ask 'why build three oscillators'? The reasons for that are as follows:

I hate trying to switch crystals electronically, as no circuit that I have tried has been a success. I have, but also hate, using one crystal and electronically switching in inductors and capacitors to pull them off frequency, even though the circuit presented essentially does use trimmer capacitors to pull the 8 MHz crystals off their intended frequency. Two of the crystals were the same type I used in the IF filter (RS Components 472-0253) - they are sold in packs of five so you will need two packs to complete the filter module and this module, however they are not very expensive. The RS Crystals were easy to pull high in frequency but did not pull low; luckily I had some older (Dick Smith, Jaycar) crystals which did not need much encouragement to pull low.

The cost of the components to make the three oscillators is relatively inexpensive. Having individual buffer amplifiers after each oscillator makes the output diode

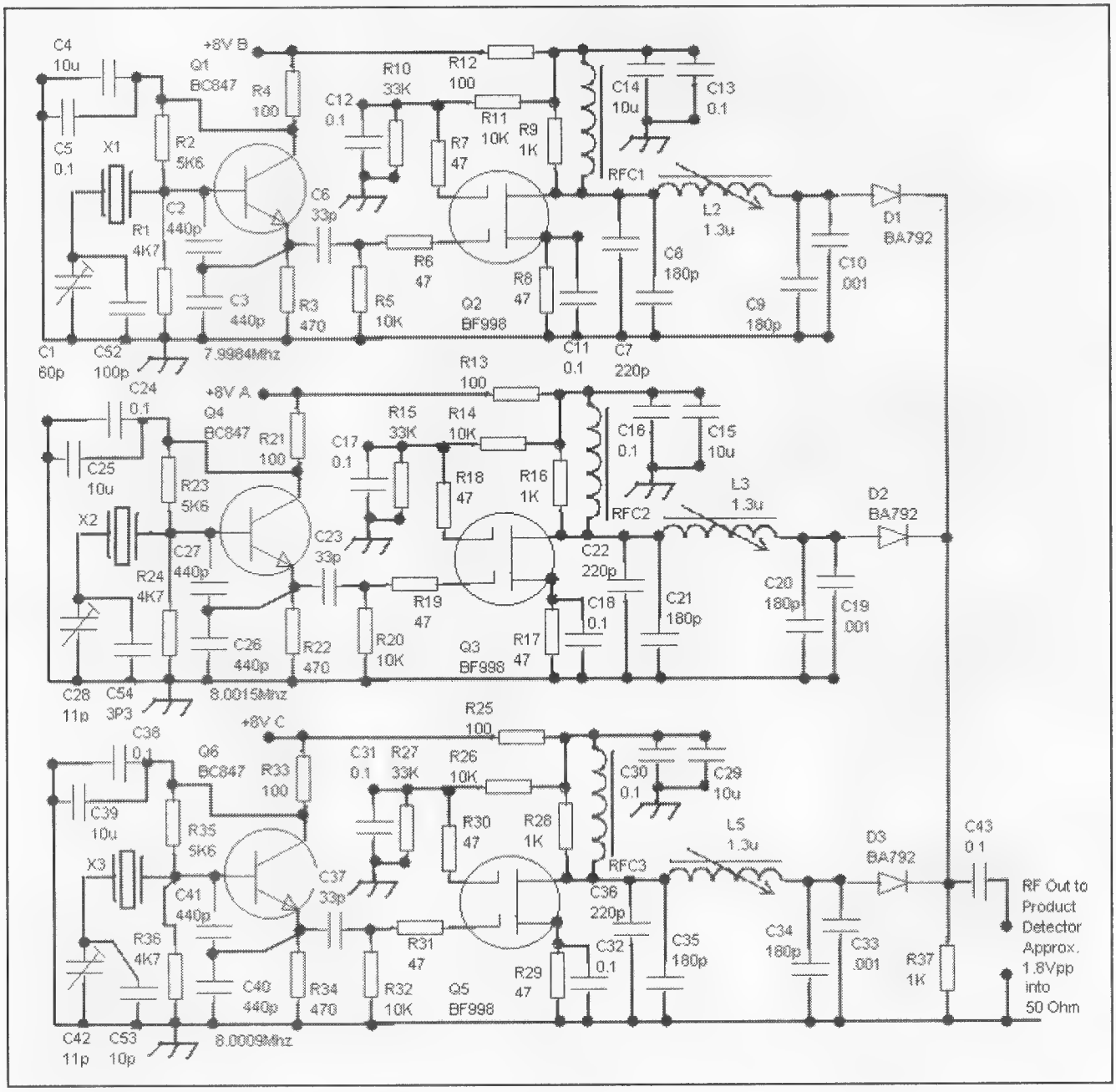

Figure 2: Circuit of the crystal oscillators.

Australian made
ANTENNAS
Setting a new standard
COM-AN-TENA
(formerly a j and j coman)

115 John Street
GLENROY 3046

6 ele Log-Yagi array 12.2 m long Boom Gain 11.5 dB, Gain F/B 30 dB	$1203
10 ele Log-Periodic 13 -54 MHz Boom Length is 10 m	$1190
NEW 2 & 70 vertical 5 dB	$156
10/11 5/8 vert 60 mm base h/d	$245
Tri band 6 ele 10 15 20	$870
20 m 3 ele lin ld 7.3 m ele length	$439
NEW 2 m broadband 12 dB 144-148 MHz	$225
2 by 5/8 co-linear 2 m vertical	$135
Log periodic 9 ele boom 8.5 m long 13/30	$1130
160 m vertical (suburban)	$355
M B Vert auto switch 10/80 m	$360
40 m linear loaded 2 ele /cap/ hats	$645
5 ele 20 m beam 40 foot boom	$995
6 m 8 ele 12 dB gain	$408
40 m 2 ele tube load Longest ele 14.7 m	$574
NEW 2 m/70 cm/10/17 elements Yagi beam antenna N-CON	$283

Guyed Masts
21 metres 13 metres
Winch-up and tilt-over aluminium and stainless steel theree sided construction. Auto brake winches

Free standing masts
9.5 metres

New Baluns
1-1 to16-1 to 3 kW

03 9773 3271
Mob 0419 542 437

switching easier and gives the flexibility of adjusting the output of each individual oscillator if crystal activity is different between the oscillators. It is important to have a constant level to the diode ring modulator.

The first part of the circuit is a basic Colpitts oscillator (capacitive feedback), nothing incredibly interesting. R33 is a decoupling resistor. It is important with all RF and AF circuits to provide some decoupling from the power supply for each active stage. The decoupling is R33, C38 and C39 (these are in the CW oscillator circuit).

I was asked for circuit point voltages for debugging. I really do not even think about them anymore having worked in electronics for some time, at least not for simple circuits like these.

The following is how to arrive at the voltages in the circuit that you should be able to measure without anyone telling you. Ohms Law, yes you knew it was going to come up again. First the voltage at the base of Q6, which is supplied by R33 and R35, and R36 is also in the mix. For quick estimations ignore R33 as it is a relatively low resistance and hopefully will only have a low voltage drop across it, so assume at first eight volts are across R35, R36. Add the values of R35, R36 together, 5600 Ohms + 4700 Ohms = 10300 Ohms, then E/R=I, so 8/10300 = 0.00077669 amps flowing. Now if we multiply that current by the value of R36 we will see the voltage across it (the voltage on the base of Q6) is 0.00077669 x 4700 = 3.65 volts. This will not be exactly correct as the base also draws some current but it should be close to what you measure with a multimeter. An NPN transistor with 3.65 volts on the base will have about a 0.6 to 0.75 volt drop across the base emitter junction, say 0.75 then 3.65 - 0.75 = 2.9 volts at the emitter. Now 2.9 volts across R34 (470 Ohms) gives you (E/R=I) 2.9 /470 = 0.0061 amperes, which means the expected drop across R33 (100 Ohm) is 0.0061 x 100 = 0.61 volts, so now you can do all those calculations again with a voltage of 8 - 0.61 = 7.39 volts across R35, R36. If the DC voltages you measure are not in that ball park something is wrong. Also remember RF current will affect the measurement, but then again if the circuit is oscillating why measure, it works!

The next part of the chain is the buffer amplifier BF998, very small but very wonderful. The first thing of note in the circuit is R31 and R30, both 47 Ohm resistors. They are stopper resistors to stop the MOSFET BF998 from going into self oscillation at a frequency you cannot see. They need to connect directly on the pad that G1 and G2 are soldered to on the board. I used 0805 surface mount resistors here as they are nice and small although I normally use 1206, larger surface mount resistors, as they are easier to handle.

The oscillator output is fed to the buffer amplifier through C37, a 33 pf capacitor. It is small in value to minimize the effect of the buffer on the tuning of the oscillator. G1 is at ground potential through R32 and G2 is used to set the gain of the amplifier. You can calculate the voltage on G2 using Ohms Law, as in the example for the transistor base voltage. It is around five volts; lowering the voltage by increasing the value of R26 will drop the gain. In general increasing the voltage on G2 increases the gain but there is a point close to supply voltage where the gain will start to decrease again. If you like to experiment use a 20 k potentiometer/trimpot on G2 and watch the RF output with a CRO.

I use low value resistors on the source of the MOSFET as it allows them to draw more current, which means more gain, more output and usually cleaner output. Of course this theory has its limits, the maximum current and power dissipation of the MOSFET need to be remembered. R28 and RFC3 provide a high impedance low resistance load to the drain of the MOSFET.

Last but most important C33, C34, C35, C36 and L5 form the output matching circuit from the drain of the MOSFET to the output, 1000 Ohms to 50 Ohms out. (The ARRL Handbook has the formulas for calculating the values of the Pi Network; I converted them to a BASIC program on the computer to make life easier).

One more thing, and very important. For D3 (BA792), it is important to use this type diode, as it is made specifically for this purpose; you can purchase them from RS Components.

When the oscillator has voltage applied to it, current will flow through RFC3 and through L5 through D3 and down R37; this achieves two things, first it forward biases D3 allowing it to pass the AC signal voltage and creates a positive DC voltage across R37, reverse biasing D2 and D1; they both should have nil volts on their respective anodes. This makes

sure that they will not conduct any RF signal.

That was a bit long winded but now you know diode switching, MOSFET amplifiers and how to work out your expected voltages and just like your school teacher, I will not be repeating myself.

Great, now you can build the module.

I have not included the layout for the PC board but there are some photos of the constructed module, refer Photos 1 and 2. In photo 1, the control section is on the left.

I use single sided PC board. It is available from Jaycar or Dick Smith. I use PC box type construction, as you will see this from the photos. The shielding material for the top and bottom is from a Milo tin. Buy the big can with no ridges in the sides, use a can opener (I use the hand held rotary type) to remove the top and the bottom of the cans, then a decent pair of scissors to cut straight up the seam, roll it out and you have perfect shielding tin. A warning, it is very sharp, so watch your fingers.

Layout should be as per the way the circuit is drawn, all three oscillators as close as possible together to make the linking of D1, D2 and D3 as short as possible.

A quick note for the layout. There is a freeware program called Eagle Soft which is circuit drawing and PCB layout software. I have used it for the layout of several other smaller and more intricate circuit boards in the transceiver. The limitation is the size of the PCB that you can do with the freeware version. It works on Windows, prints out the board actual size and gives you a way to store some layouts. I simply used a Dalo pen for this board and the rest of the IF system.

I learnt when looking at the way the Japanese put their radio circuit boards together that you keep the RF and AF stages small and close together on the circuit board. Do not worry about making circuit tracks for the supply rails, just decouple them and make a hole. Use hook up wire to wire up the DC, it gives you much more freedom when doing the layout. Keep the DC and switching of DC on one side and the RF stages on the other side.

Component notes: All capacitors 0.1 uF and below are surface mount, either 1206 or 0805. All resistors are surface mount 1206 or 0805. They are all available from RS Components or Farnell Components. They both do mail order over the internet so no problems.

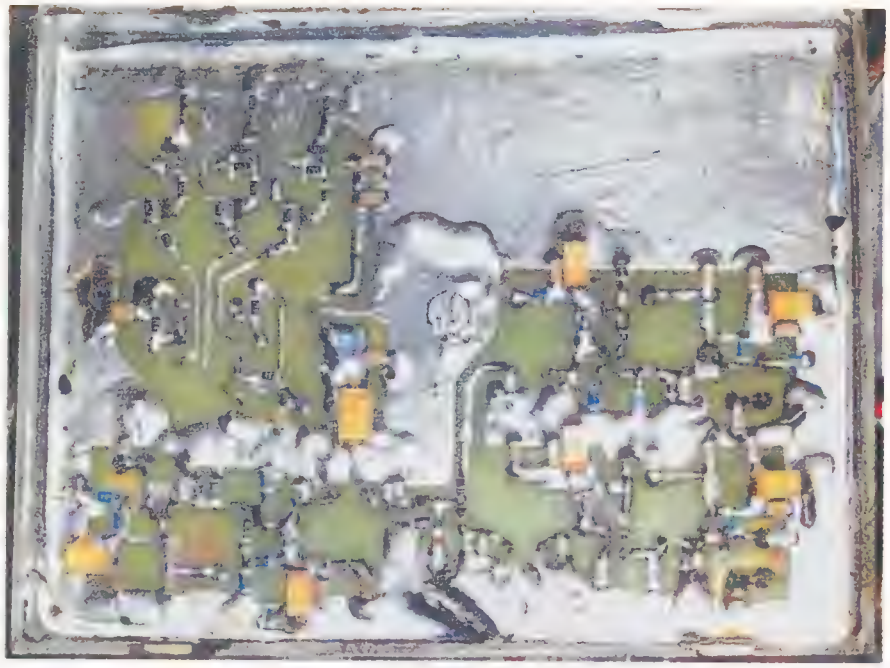

Photo 1: The BFO bottom layer.

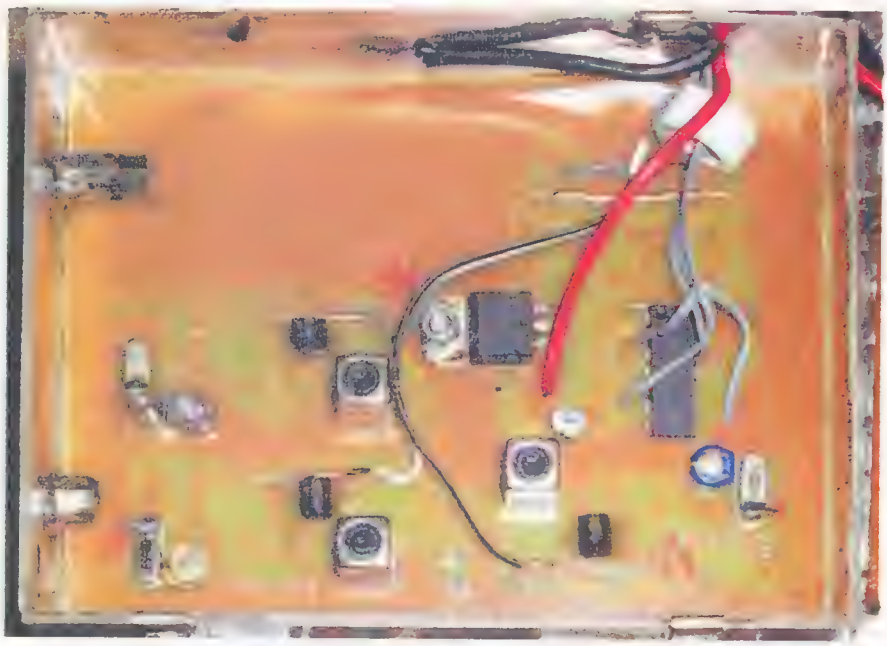

Photo 2: The BFO from the top side.

The 10 uF capacitors are surface mount solid tantalum 10 uF 35 V and are available from Jaycar.

BC857 and BC847 are surface mount, available from Jaycar. BA792 and BF998 are available from RS Components. 74HC00 is DIP14, 7808 is TO-220 and the 78L05 is TO-92, and are available from Jaycar, Farnell or RS Components.

Crystals X2 and X3 are the same type used in the crystal filter module; you will need two packs (RS Components sell them in a pack of five, part number 472-0253). They could be moved higher in frequency easily but were not so easy to move down in frequency. I found an old HC49 8.000 MHz crystal and used it for X1. Check at Jaycar or Dick Smith.

Trimmer capacitors came from RS Components but I am sure Farnell and Jaycar have suitable substitutes.

Remember the value of the capacitors tuning the crystals is dependent on the specific crystal; you may need to experiment if they do not work.

You will also need a roll of 0.25 mm enamelled copper wire; you can go a

Photo 3 Raising the IF can dimples with a small screwdriver

Photo 4: Removing coil former with unused pins.

Photo 5: Break top winding to remove turns for new value.

little smaller if you have to, to 0.2 mm. The wire is to wind the RFCs and ring mixers throughout the project. While we are on the subject, RFC1, RFC2 and RFC3 are all 10 turns of 0.25 mm wire wound on FX1115 ferrite beads. The FX1115 beads are available from Jaycar in packs and again are used through this entire project.

The last component is L5, L3 and L2, they are a TOKO Inductors 292CNS T1044Z pre wound miniature 2.2 uH adjustable inductor which I modify and use throughout the transceiver. At a rough guess, through the entire project I have used close to 80 of them; they are very easily pulled apart, small and easy to re-wind.

The hard bit is that they are available through EATON Electrics in Australia but the minimum quantity I was quoted was 400 pieces (that was in February 2008). Good thing they are easily modified; if you are in a club just get them, they are good.

I have attached some photographs of the re-winding procedure, refer Photos 3, 4 and 5.

ar

WIA 100 Committee Call for Articles

The WIA 100 Committee continues to receive material from amateurs wishing to enhance our recorded history. Our "Call for historical articles" has resulted in some very interesting and worthwhile material being received.

This month, the Committee acknowledges the following:

From Alan VK3AL: A fascinating story of his early involvement in radio from 1927 to 1956 complete with some unforgettable lessons!

Richard VK7RO has forwarded a large number of early Australian magazines for inclusion in the Archive. While most of these magazines were directed at the broadcast listener, they also report on amateur activities and so will add to our early knowledge.

From John VK3ACA: A transcription of part of the Minutes of The Amateur Wireless Society of Victoria (1911-13).

Bruce VK3WZ has supplied information on his grandfather, R.P. Whalley 3JZ, who was involved with the early days of the Brighton Radio Club and the WIA. The Whalleys have been amateur radio operators for four generations!

All historical material will be used in *Amateur Radio* magazine or on the WIA website. Material will be indexed and placed in the Institute's Archive and will be available for future research.

Thank you to all who have contributed, but we would like more! Please help us to preserve the history of our hobby by writing about your club, an outstanding amateur or event.

The committee also welcomes articles on the future of amateur radio: The changes foreseen and even predictions for our future. Many new modes are being adopted by the more progressive amateur, how are these going to set the stage for the future amateur? **ar**

A 30 watt linear amplifier for two metres

Dale Hughes VK1DSH

There are many different types of low power SSB transmitters, or transceivers, for use on the two metre band. For local or for line-of-sight contacts low power is adequate and many enjoyable contacts can be had. However, for longer or non line-of-site paths higher power is desirable.

This article describes the design and construction of an amplifier, which will produce in excess of 30 watts PEP when driven by a low power transmitter. The prototype is used with a home-made SSB transceiver with three watts output. The input coupler can be adjusted to accept higher or lower power levels if required.

It was decided to base the design around the readily available and reasonably priced Mitsubishi amplifier modules and printed circuits boards, which can be purchased from Mini-Kits in South Australia. A number of different types are available, covering various frequency ranges and power levels.

The one used in this design is a RA60H1317M which is nominally a FM unit with a 60 watt output, but by setting the bias to an appropriate level the module works well as a linear amplifier. The Mini-Kits PCB was modified to suit the particular requirements of my transceivers. Press-To-Talk circuitry was added by cutting the track which carries power to the bias regulator.

Circuit description

The RF input from the excitation transceiver passes through a network of resistors and a variable capacitor, which can be adjusted to give the required drive level.

The resistors reduce the input power to the module so that it isn't over-driven; they also ensure the correct termination impedances for both the transceiver and amplifier.

The output filter consists of two low pass pi sections coupled by a small value capacitor and the end result is a band pass filter with a pass band of several megahertz centred on 144.1 MHz.

A novel feature is the use of a short length (~10 mm) of semi-rigid coaxial cable as the coupling capacitor (C16) between the two filter sections instead of a conventional leaded or SMD component; this is done because of power considerations.

The capacitance of a conveniently longer length of cable is measured and the appropriate length to give 1 pF is cut off. Inductors L1 and L2 are 8 turns of 0.91 mm enamelled wire close wound on the shank of a 6 mm drill. The tuning capacitors (C15 and C17) are small film type trimmer capacitors. The measured insertion loss of the output filter was less than 0.4 db.

Both the input attenuator and output filter were based on designs published in RSGB publications: a version of the input attenuator was published in volume 3 of the *Microwave Handbook* (1992) and the output filter was published in the *Radio Communications Handbook*, 8th edition (2005).

To avoid stray coupling between various parts of the amplifier, the input attenuator and output filter are mounted in small screened enclosures made from scrap PCB laminate. In both cases the components are soldered 'dead-bug' style to the copper laminate.

The amplifier bias voltage is provided by a 7805 three-terminal regulator and the amplifier quiescent current is set using a trimmer potentiometer, which acts as a simple voltage divider, the correct bias voltage is 4.5 volts.

So that the transceiver can control the amplifier and switch between transmit and receive, the Mini-kit supplied printed circuit board was modified to switch the bias on during transmit and off during receive, this was done by cutting the track on the PCB which provides power to the 7805 regulator.

Power to the bias regulator is passed through a separate pass transistor which is controlled by the PTT line. With zero bias, the amplifier quiescent current drops to practically zero as enhancement FETS are used within the RF amplifier module.

The transceiver interface also controls the two relays in the RF path. During receive, the amplifier is bypassed and the input signal passes directly to the receiver. When the PTT input is grounded, the RF relays are energised

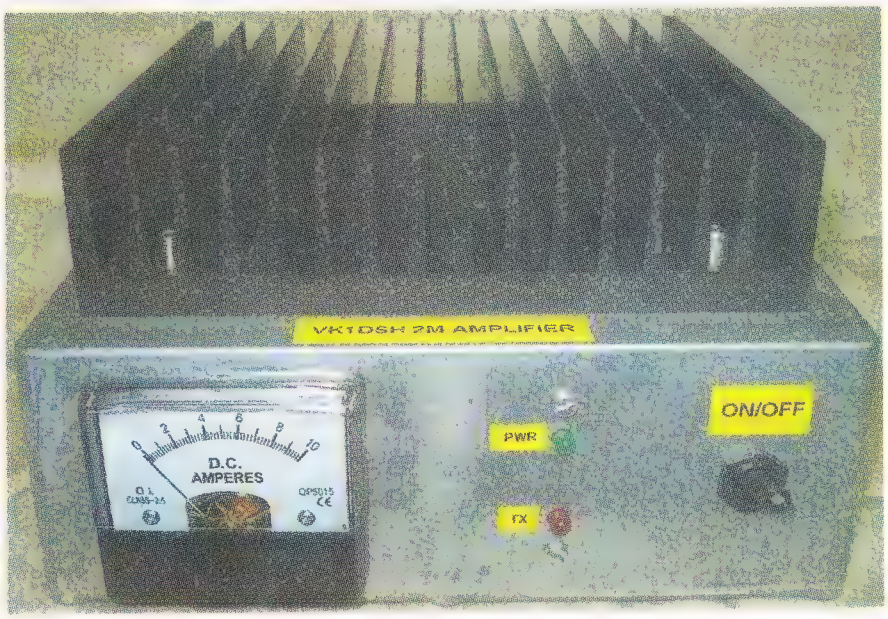

Figure 2: An external view of the completed amplifier.

and the bias is applied to the amplifier module. RF output from the transceiver is then amplified and connected to the antenna.

Miniature coaxial relays removed from surplus equipment were used in the prototype, but Mini-Kits also sell relays that would be suitable for use in the amplifier.

General construction

The amplifier was mounted inside a diecast box that was on hand; the removable panel became the bottom of the amplifier and all the amplifier components were mounted on the sides or top of the box.

A square hole was cut in the top of the box so that the PCB and amplifier module could be screwed to a heat-sink.

The modules containing the input attenuator and output filters were also screwed to the top of the box adjacent to the Mitsubishi module. Miniature coaxial cable was used to connect the modules and relays.

No specific details about the heat-sink can be provided as it was purchased at a trash-and-treasure meeting of the local radio club.

However it is big and heavy; which it needs to be if extended use at high power is intended. Overall efficiency of the amplifier module is approximately 50%, so significant heat needs to be dissipated.

Note that it is very important that the heat-sink be completely flat in the area where the amplifier module is mounted otherwise the amplifier substrate may crack when it is screwed to the heat-sink. Also, the module leads must be soldered to the PCB after the module is screwed to the heat-sink.

Other components are mounted on a small length of tag-strip screwed to the side of the box. Input power terminals, PTT terminals and the RF input/output connectors are located on the rear of the box. Front panel LED's and an optional ammeter complete the design. One LED indicates when power is connected and the other illuminates when the amplifier is in use.

Adjustments

Amplifier bias: the bias voltage for the amplifier must be set to 4.5 volts, and this should be done before the amplifier module is soldered to the PCB. Once the bias voltage is set it must not be changed.

The output filter is adjusted by transmitting at low power into a 50 Ω dummy load and adjusting capacitors C15 and C17 for maximum power output.

Output power from the prototype is 30 watts with three watts drive (via the input attenuator). Current consumption at this output is 4.5 amps at 13.6 volts. Higher power can be achieved at the expense of amplifier linearity and signal quality.

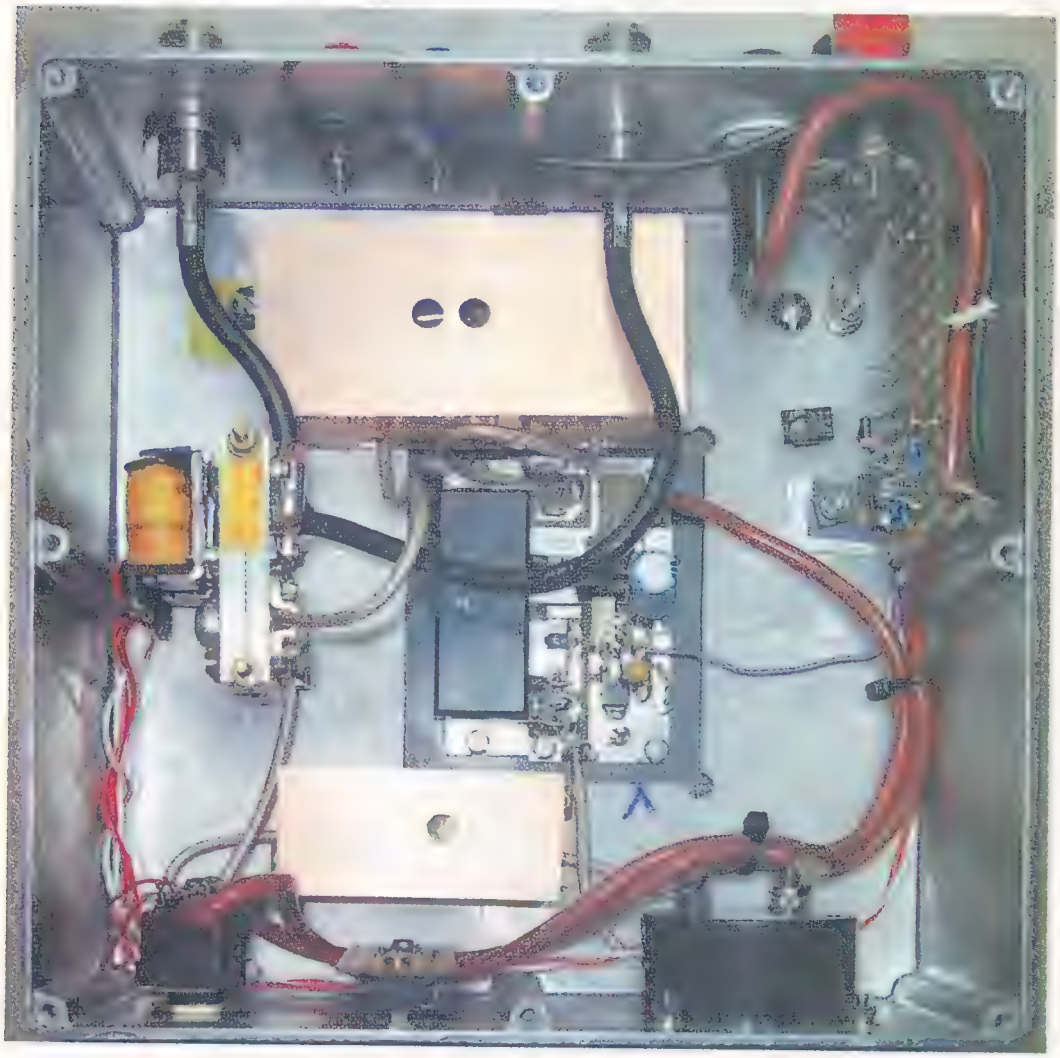

Figure 3: An internal view of the completed amplifier.

Suppliers

As previously mentioned, the Mitsubishi amplifier module and associated PCB were obtained from Mini-Kits Pty Ltd (see: www.minikits.com.au). The variable capacitors were obtained from Rockby Electronic Components (see: www.rockby.com.au). The rest of the components can be obtained from the usual range of suppliers.

Conclusion

A linear amplifier suitable for use on 144 MHz has been presented. The prototype unit performs very well and significantly enhances the capability of my station. Signal quality reports have been favourable and no interference problems have occurred during use.

No particular problems should be experienced during construction or use of the amplifier.

ar

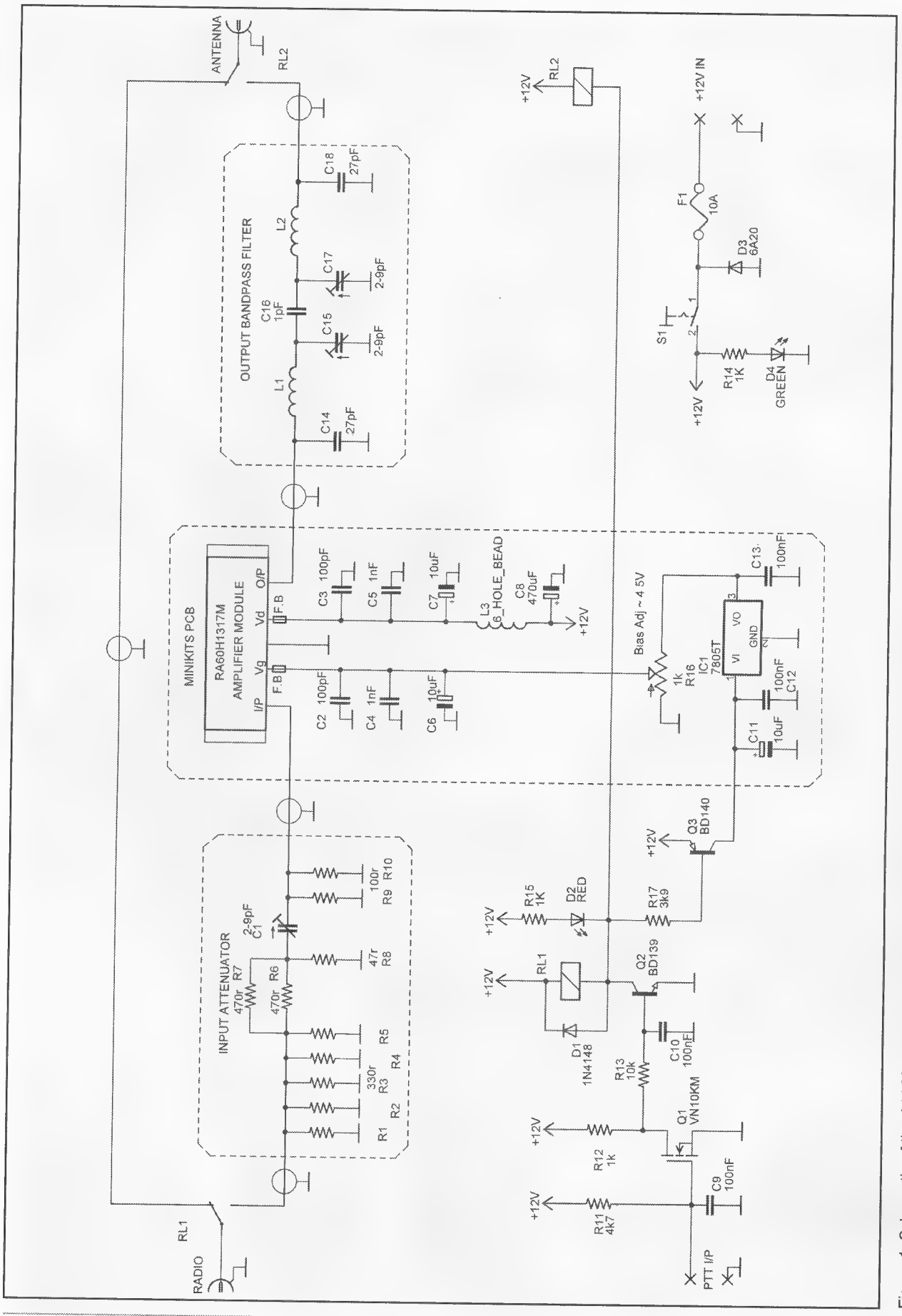

Figure 1: Schematic of the 144 MHz linear amplifier. The amplifier and bias circuitry are mounted on a printed circuit board purchased from Mini-kits Pty Ltd. The input attenuator and output filter are housed in enclosures made from scrap PCB laminate. The unit enters transmit mode when the PTT I/P is grounded.

100 YEARS

1910 ~ 2010 WIRELESS INSTITUTE OF AUSTRALIA

Centenary Merchandise

Celebrate the Centenary in style

To help members celebrate the WIA Centenary, a range of 'limited edition' Centenary merchandise is now available for online purchase via the Centenary Merchandise section of the WIA website.

The merchandise below sports the WIA 100 Years Centenary logo and is being expanded to include many other commemorative items and memorabilia. Members are encouraged to keep an eye on the WIA website for all the latest products. Visit **www.wia.org.au** and click the Centenary logo on the right hand side of the home page.

All shirts and jackets are available in the following sizes: Small, Medium, Large, X-Large, XX-Large, XXX-Large.

Please note: all prices below are WIA member prices and are inclusive of GST, delivery charges are calculated with your online order

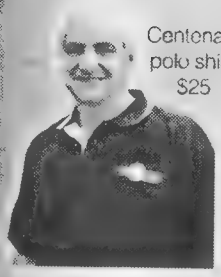

Centenary polo shirt: $25

Centenary tie/ jacket pin. $8

Centenary logo sew on patch: $8

Centenary bucket hat: $12

Centenary cap: $12

WIA Centenary poster A1 size $10

WIA Calling CQ poster A1 size $10

Centenary shirt short sleeve black: $32

Centenary shirt long sleeve white: $33

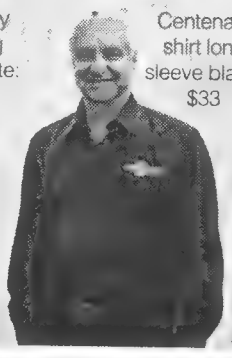

Centenary shirt long sleeve black $33

Centenary fleecy vest: $35

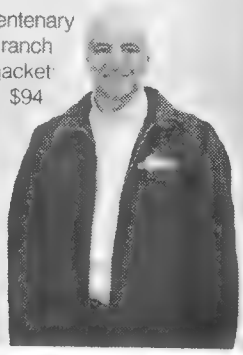

Centenary ranch jacket: $94

Spotlight On SWLing

Robin Harwood VK7RH

2009 is almost over with the shortwave scene rapidly downsizing. HCJB in Ecuador has gone, outsourcing their programming to Chile, French Guiana or the UK. HCJB-Australia, a separate entity has carved a niche broadcasting to the Sub-continent and S.E. Asia. Their senders are located at Kununurra (WA) and they are hoping that a third sender may be operational during 2010.

Radio Prague in Czech Republic may be the next major broadcaster to quit shortwave on the 31st December. There naturally was protest from its worldwide listeners but sentimentality or history does not easily sway the anonymous bean counters making these decisions.

They favour podcasts and streaming over shortwave radio, which they see as an obsolete technology. The former may be cheaper to produce yet there is a larger audience listening to radio. Ironically Bratislava, the capital of Slovakia is also considering abolishing shortwave broadcasting. Split from Czechoslovakia in 1993, both still share the HF senders.

Poland closed down their shortwave senders in favour of leasing transmitter time in Germany. Signals dramatically improved but the Poles did not count on the senders being onsold. Poland now leases airtime from the Austrians. Vienna still is on shortwave but effectively closed down the External Services in favour of relaying the domestic programming.

Myanmar, formerly Burma, has been easily heard here, drifting between 9730.8 and 9731 from 1030. In local languages it has a very distinctive music style, more American C&W than either Bollywood or Thai, two styles that dominate the region. However at 1100, the BBC World Service comes on exactly 9730 and unsurprisingly it is in Burmese. The Singapore senders easily drown out the hapless Burmese but only for 30 minutes on weekdays, leaving Myanmar in the clear at the weekends.

I do not know if the program originates from Yangon (Rangoon) or from the newly constructed national capital. It signs off around 1130. I wonder if it is the same broadcaster on 5770, also from Myanmar that is audible around 1230.

The annual Sydney-Hobart yacht race is on from the 26th of this month. HF continues to be used but the night-time channel of 6516 will be affected by a South Korean clandestine station on 6518. The North Koreans have retaliated by intensely jamming it using a combination of DRM and Stanag, a modem extensively used by the military.

The result: the jamming is louder than the clandestine and spreads over the yacht race frequency. The North Koreans also similarly jam other channels of this clandestine on 6600 and 6003.

Laos is a small exotic country, wedged in between Thailand and Vietnam. It can be heard on 6130 at around 1100 and from 1130 it pops up on 7145, right in the middle of the 40-metre amateur band DX window. It is very weak and almost impossible to make out yet I am told it is a relay of FM. It has been there for some time but has been inaudible due to the presence of other broadcasters. These have now departed but Laos is still there but now upsetting amateurs. Laos as you may surmise does not have amateurs.

I hope that you enjoy monitoring over the Christmas New Year break and hope the Sunspots will return soon.

All the best from Robin VK7RH.

tts systems

Season's Greetings and a Happy and Prosperous New Year from all at TTS.

www.ttssystems.com.au

Phone: 03 59774808 Email: info@ttssystems.com.au

Your Australian reseller for :

BUDDIPOLE

SGC

PALSTAR

TEN-TEC

LDG ELECTRONICS

Meanwell Power supplies

Diamond Products

Daiwa Products

Technical Books

Amidon Products

Custom cables made to order

We will be at the Centre Vic Radio Fest at Kyneton on Sunday February 14, 2010

As before, you can still get a free Catalogue – just call

T-boom Yagis

Barry Miller VK3BJM

This article provides very detailed, indeed quite specific, instructions on how to fabricate a multi element VHF Yagi, in this instance for 1296 MHz. While being quite specific in measurement detail and construction techniques for the frequency chosen, the methodology could be applied to a very wide range of amateur (and non-amateur) antennas.

As antenna design and construction is one of the last widely utilised areas of building for a great many amateurs, it provides a solid plan, and common sense principles, to complete a 'first-class' product.

Introduction

About a year ago, I started considering increasing the size of my 1296 MHz antenna. I currently use a home-brew 39-element DL6WU-design Yagi.

It was designed using the Microsoft® Excel spreadsheet created by David Tanner VK3AUU in SuperCalc and translated to Excel by Peter Freeman VK3KAI. I used 12 mm box-profile aluminium for the boom material, and 4.74 mm aluminium tube for all the elements (except the driven element, which was 3.175 mm copper tube). I also wanted to build a couple of Yagis scaled for use with my 1090 MHz ADS-B receiver.

I was aware that, at 4.74 mm, the diameter of element material was larger than ultimately desirable for 1296 MHz, and that it would also be preferable to reduce the cross-section of the boom material. Finding small element material was, well, elementary… Aluminium TIG welding rods are available in a couple of suitable diameters; it was easy to obtain 2.5 kg of 1000 mm long rods, of 2.4 mm diameter. Brass rod of the same diameter would be used for the driven element (a folded dipole). Wondering how best to approach the boom issue, I asked about…

Theory

One person I asked was Gordon MacDonald, nee VK2ZAB, till recently VK3ACC and currently VK3EJ. Gordon mentioned an idea he had had a few years earlier, but had never acted upon: that of using "Tee" profile aluminium as boom material.

"Tee" profile looks, in cross section, like the letter T. The idea was to turn the material upside down, and mount the elements through the top of the upright portion of the T (within a millimetre of the top). With the element in its final position, the top of the boom would be punched down using a cold chisel, holding the element firmly in place – full metal-to-metal contact.

The "Tee" profile chosen for this project has a wall thickness of 3 mm, and the "upright" and "base-plate" portions of the T measure 25 mm (refer Diagram 1: Tee Profile). It is available in lengths up to 6.5 m long from Capral, and should be available elsewhere in shorter (2 m) lengths. The Capral Product Code for this profile is currently 841506, though it used to be called "E20193MF605400" in the old Capral "Little Blue Book".

This article is to document how I implemented Gordon's idea.

Tools

Firstly I will run through the list of tools I used in making this Yagi. You may not have all of these available but, whilst this is what I used, others may be substituted.

For cutting the element material to length:

- 150 mm vernier callipers
- 300 mm steel ruler
- Fine tip permanent marker
- Cable shears
- Small mill bastard file

For marking, cutting and drilling the boom:

- Scriber
- Centre punch
- Hammer
- Ruler or tape measure
- Marking gauge
- Try square
- Drill (preferably a drill press)
- 2.5 mm drill bit
- 16 mm drill bit
- Hacksaw
- Small round file
- M3 x 0.5 tap
- Tap wrench

For fitting the elements:

- Cold chisel
- Soldering iron

Materials

- 25 x 25 x 3 mm "Tee" profile for boom material
- 2.4 mm aluminium TIG welding rod
- 2.4 mm brass rod
- N socket – with four hole flange
- 4 x M3 x 0.5 mm machine screws, with split or external star washers, preferably stainless steel
- UT-141 or QF-141 for 4:1 balun
- Epoxy resin (Araldite™)
- Solder

Construction

As mentioned in the Theory section, this article is to document a method – not an antenna design. For this example, I made use of the VK5DJ Yagi Calculator, which produces dimensions based on the DL6WU design, to produce a 10-element Yagi for 1296.150 MHz. Feel free to use whatever design you like, but be aware that you are **experimenting**!

Firstly, cut the passive elements to length from the aluminium rod; and cut the driven element to length from the brass rod. Mark the rod with either the scriber or a fine tip marker, and cut using the cable shears. Check the length with the Vernier callipers and, if a little long, use the file to reduce to the desired

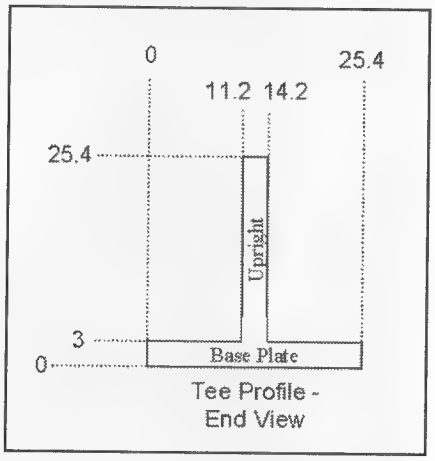

Diagram 1: Tee profile – end view.

length. (Using this method, I found it easy to make near-to square ends when cutting with the shears; and length was within 0.5 mm of the desired figure. This was handy when cutting the 196 passive elements for my new four-Yagi array – an exercise that only took four hours in total – and practice does make perfect…)

Secondly, cut your boom material to the required length.

Next, use a ruler/tape measure, the try square and a scriber to mark the position of all the elements, with a scored vertical line on the "Tee" upright.

In order to suit the 2.4 mm element material, I decided to centre the 2.5 mm element mounting holes 2 mm down from the top of the "Tee". This leaves 0.75 mm of boom material to "punch down". Using the marking gauge (or a ruler) mark a line parallel to the top of the "Tee", 2 mm down from the top, over each of the element position marks.

Then use the centre punch to make a small locating mark for the drill hole – do this for all the elements *except* the driven element.

Now, and with the boom clamped firmly, drill the holes for all the passive elements with a 2.5 mm drill bit, using kerosene as the drill bit lubricant/coolant.

Once you have drilled the holes for all the passive elements, it is time to prepare the boom for the active element – the driven element assembly. This involves removing a portion of the "Tee" upright; and drilling clearance and mounting holes for a flanged N socket.

Using the try square, mark a line on the "Tee" upright; it should be 5 mm towards the driven element location from the reflector location. Also mark a line 5 mm towards the driven element from the first director. Refer Diagram 2: Side View.

Turn the boom over and, using the ruler and the try square, mark the location of the driven element. This is done by marking a line across the "Tee" base-plate, then mark the centre of this line. Use the centre punch to make a locating hole at this spot.

Next thing to mark are the four locating holes for the flanged N socket. See Diagram 3: Top View, for measurements for the lines to be marked. Once marked, centre-punch these four spots.

For the Yagi I have built, I tapped these four holes to suit M3 x 0.5 mm machine screws; this meant drilling the four holes using a 2.5 mm bit, to suit the M3 tap. You do not have to do this, if you are not confident about tapping holes. The alternative is to drill the holes using a 3 or 3.5 mm bit, and use M3 nuts and split washers with the bolts. Drill the four holes using whichever size bit you decide on; use the same bit to drill a pilot hole for the body of the N socket.

At this point you have a choice as to the order you proceed; you can drill the clearance hole, and then remove the portion of "Tee" upright, or you can remove the portion of upright first then

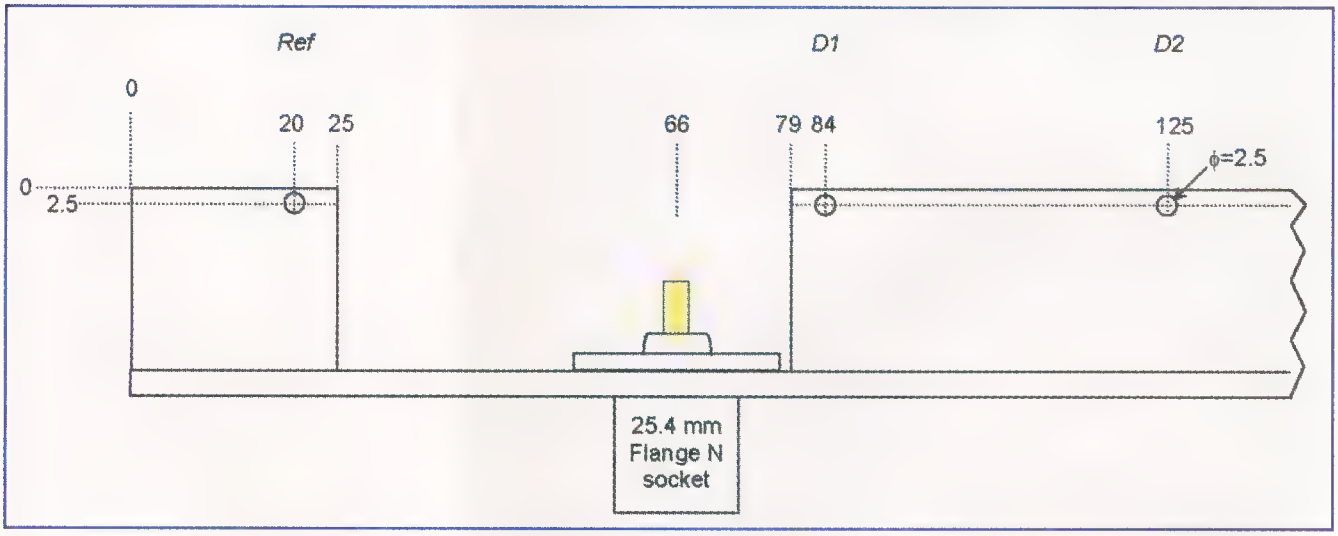

Diagram 2: Tee profile - Side view.

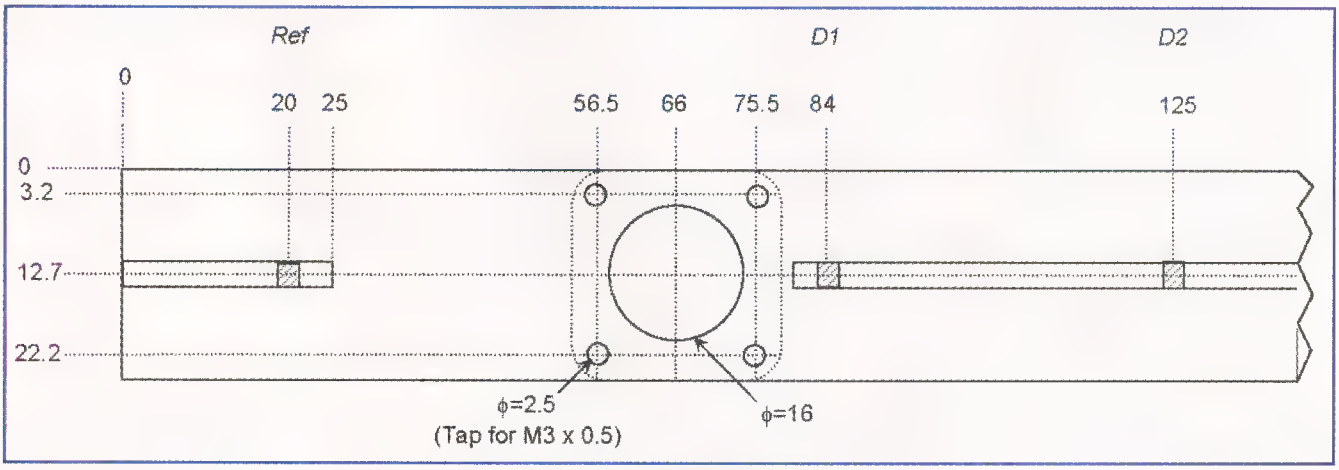

Diagram 3: Tee profile – Top view.

drill the clearance hole. I chose to drill first, as keeping the "Tee" upright intact maximises the strength of the boom whilst drilling the hole, which is quite large. Of course, if you do not have a 16 mm bit, you can use the largest bit you have and then use a file to enlarge the hole to the required diameter.

If you have chosen to drill the hole first, do so. Once done, turn the boom over, and use a hack saw to cut down the lines marked between the reflector and first director. Continue with the hacksaw and a mill bastard file to remove the "Tee" upright portion; refer to Diagram 4: Cut View, for a visual description of how I did this. Clean up the area around the clearance and mounting holes. Take the N socket and check that it fits, and that the mounting holes line up. If you decided on tapping the mounting holes on the boom, do this now.

Finally, before fitting any of the elements, there is the matter of a boom/mast mount to attend to. To some extent, the mount arrangement will have to be personalised to suit your mast arrangement. What I will describe is the basic mount design I have used in an H-frame configuration – it has also proved suitable for the 1090 MHz ADS-B Yagi, which is vertically-polarised. For a single, horizontally-polarised Yagi, modifying this design to create a single, small, "trombone"-style mount is a relatively simple task. (See Photo 1)

For long boom Yagis, I attached a length (1000 mm) of 25.4 mm square profile tube to the base plate. This tube is placed so that the middle of the length is over the balance point of the Yagi.

Of course, as the Yagi has not been fitted with all the elements, finding the true balance point is difficult! However, as there is very little weight in the Yagi anyway, not having the balance point exactly right should not cause any structural hazard. You can estimate where the point should be, or you can place the elements temporarily in the mounting holes for a more accurate idea. I drilled four 5 mm holes through the square profile tube. Another four 5 mm holes were drilled through the "Tee" base-plate. Four M4 x 35 mm bolts are passed through the base-plate and the square profile, to secure the two together.

I then cut two pieces of 3 mm aluminium sheet, in the shape of a right angle triangle. The two legs of the triangle should be 180 mm, giving a hypotenuse of 255 mm. Refer to Diagram 5 Boom-Mast Bracket for dimensions and bolt-hole locations. Diagram is on page 35

Another length of 25.4 mm square profile is cut to be the outrigger arm – it could be cut to whatever length suits your application, but in my diagram it is shown as 300 mm long. Again, the diagram shows dimensions and locations for these bolt-holes. Two M4 x 35 mm bolts are passed through the triangular plates and the square profile supporting the boom. Another two M4 x 35 mm bolts are similarly passed through the plates and the outrigger arm. Two holes would also be drilled through the opposite end of the outrigger arm, to hold a U-bolt which would clamp to your mast. The hole-size for the U-bolt depends on the U-bolt you have available!

You can now fit the passive elements. The dimension provided by the VK5DJ calculator includes an insertion length – the distance between the element tip and the point on the element where it emerges from the boom. Mark this point on each element, using a fine permanent marker, and insert the element into the appropriate hole. When the element is in to the correct depth, place the cold chisel above the mounting hole, and hit it down

Photo 1: The Boom/Mast Bracket.

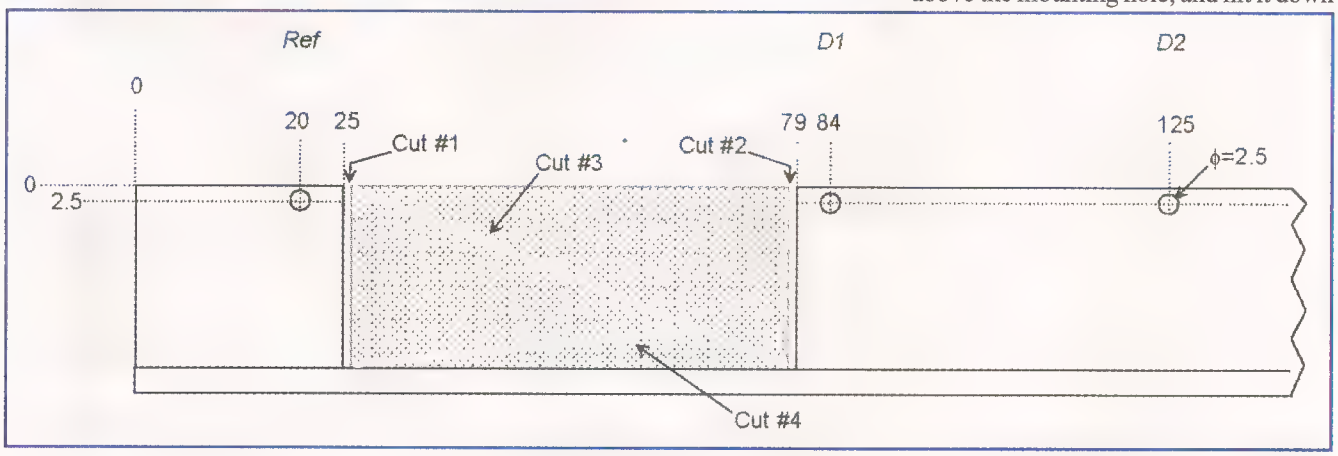

Diagram 4: Tee profile – the cut view.

with the hammer – this needs to be a firm tap, but don't go berserk; it is aluminium, not steel! Through trial and error, I found the best results were obtained by making two hits per element; one from each side, holding the cold chisel at a 45° angle.

If the element holes have been drilled squarely and cleanly, when the elements are punched down they should sit inline and square to the boom.

Next is the construction of the driven element assembly (See Photo 2).

The VK5DJ Calculator provides all the dimensions for cutting and bending to shape a folded dipole. The dipole material used was 2.4 mm brass rod; the gap at the feed-point was 3 mm and the bend radius was 4.5mm. I used a 9 mm drill bit as a bending former. Cut the brass rod to length; file square the ends and clean about 5 mm of each end of the rod with steel wool or fine grit sandpaper. Mark the rod as per the directions and dimensions provided by the VK5DJ calculator, and fold the rod to shape.

The half wave 4:1 Balun is made from UT-141 hardline (though semi-flex QF-141 could be used and would be easier to form) and for 1296 MHz is 81 mm long (end-of-shield to end-of-shield) plus leads (allow 10 mm of inner at each end). Refer Diagram 6: Balun. Once cut to length, the hardline needs to be formed into a "U" shape, with the gap between the inside faces of the shield ends measuring about 5 mm. Check that the Balun, together with the N socket, will actually fit into the gap cut in the boom. If it does not, reshape the Balun so that it does fit, or enlarge the gap a little.

Now for some soldering! Tin the two sides of the feed-point. Also tin about 5 mm of each end of the hardline Balun shield, and the exposed inner. Finally, you need to tin the centre "pin" of the N socket, along with a section of the rear of the flange.

Holding the dipole in position, solder side "A" of the feed-point to the centre pin. Take the Balun and solder the shield to the flange; the Balun needs to be positioned so that the inners can be bent in a curve up to the feed-point. When the shield is soldered in place (and the flange has cooled suitably!) bend the Balun inner tips up to meet the feed-point. Solder the inner tip that connects to side "B" of feed-point ***first*** (that is, the feed-point that is not connected to the centre pin). When that has cooled, bend the other inner tip towards the centre pin/feed-point junction, and solder it, too.

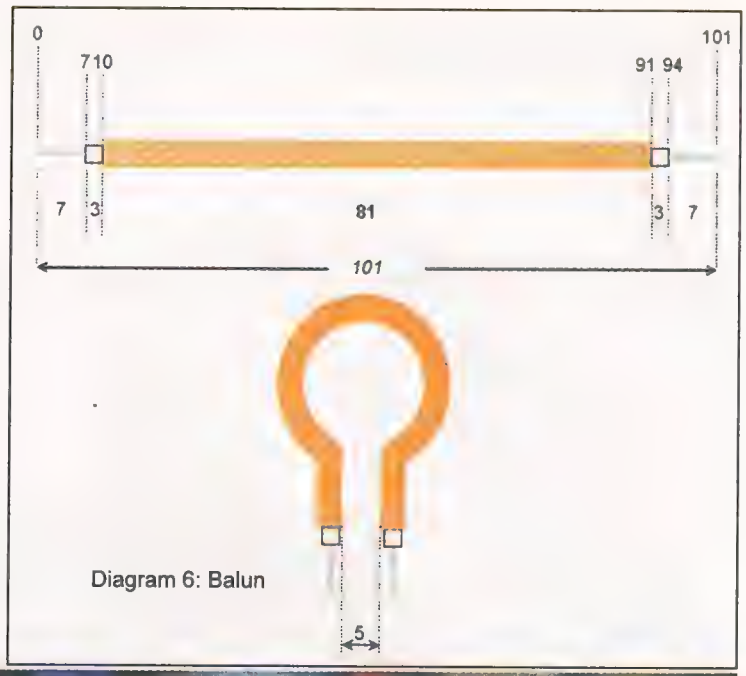

Diagram 6: Balun

Photo 2: Driven Element Assembly

Photo 3: Fitting the Driven Element Assembly

Photo 4: (above) Epoxy weatherproofing

Photo 5: (below) Finished!

When you are happy with how the assembly looks and the quality of the solder joints, you can place the assembly on the boom, and bolt it down using the M3 bolts. Use either split or star washers, or a thread-lock liquid (such as Loctite®) to ensure the bolts don't work loose (See Photo 3).

A quick test should be performed on the antenna; if you are happy with the Return Loss, or VSWR, the Balun ends/Feed-point/centre pin area should be coated with a suitable epoxy resin.

Araldite® proved suitable (after a blast in my microwave oven resulted in no warming of the resin), to weatherproof and add rigidity to the assembly. (See Photo 4)

Alignment and adjustment

The 1296 MHz 10 element was tested at home with ye olde Revex® W-570 VSWR meter and, without any adjustment to the elements, the Yagi gave a reading of 1.3:1.

The 1090 MHz 10-element Yagi was swept with the assistance of Alan VK3XPD; with a little tweaking, a return loss of 23 dB was achieved. This tweaking amounted to a little filing of the first director ends, and tilting the driven element forward slightly.

Summary

I have built three Yagis using this method, so far. Two (one 10-element and one 28-element) are for use at 1090 MHz with my ADS-B receiver, and the third is a small 10-element "test-bed" Yagi for 1296 MHz. I have four more under construction – four 50-element Yagis to be used in an array on 1296 MHz.

Diagram 7 (below): The folded dipole.

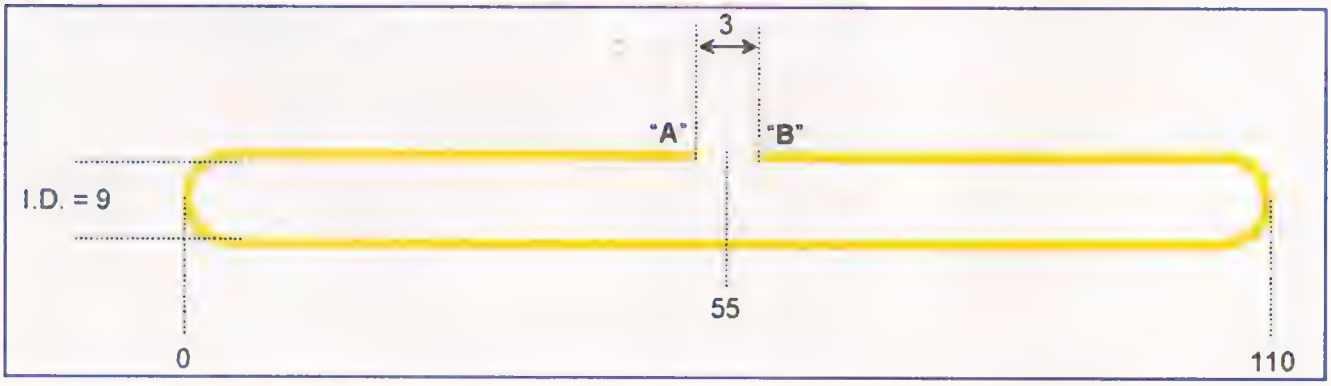

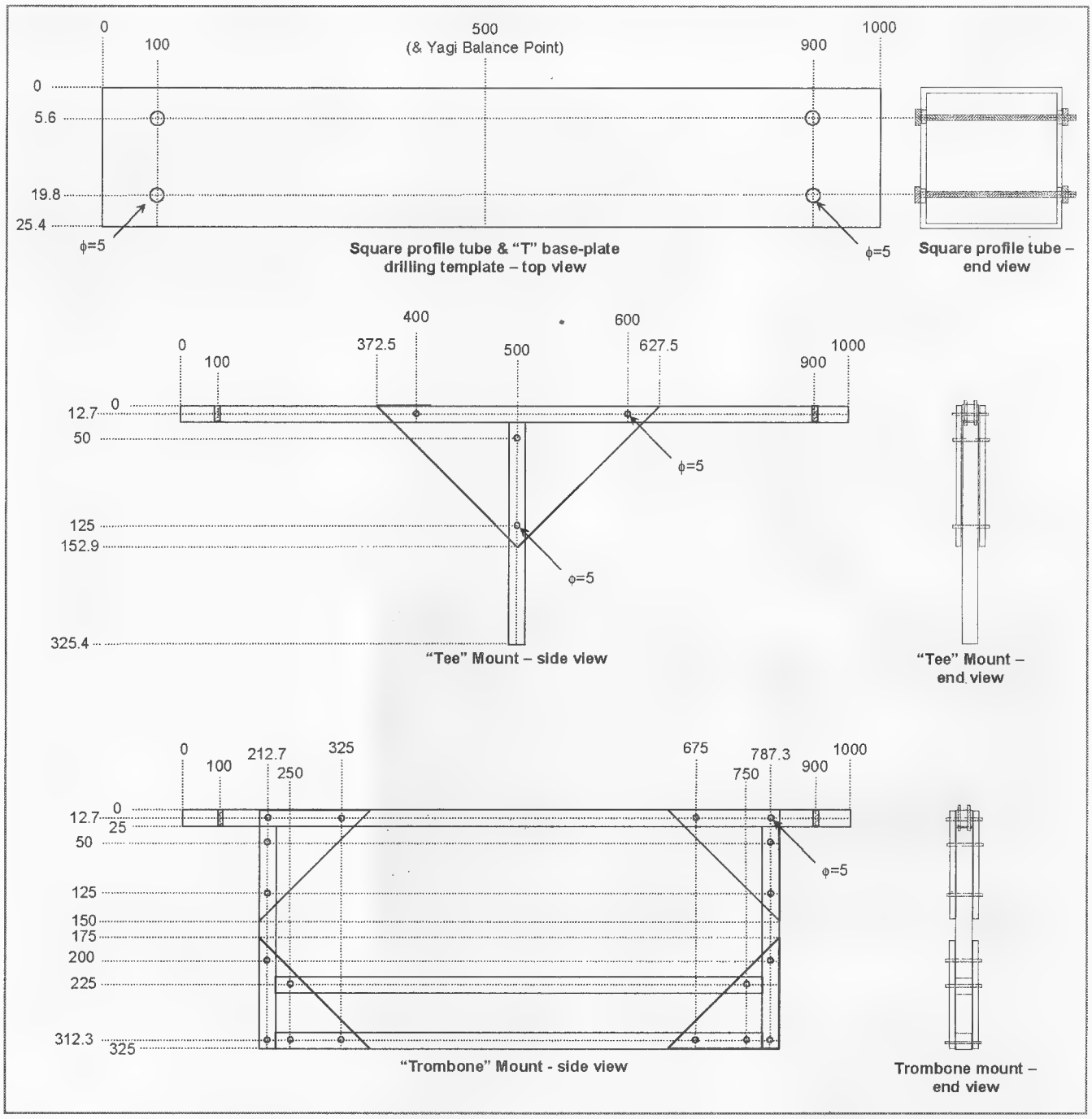

Diagram 5: The boom to mast bracket.

currently in use at the top of my tower, and is a considerable improvement over the 16-element co-linear that I was using with my ADS-B receiver.

Proper tests to establish cleanliness of the radiation pattern are yet to be performed, mainly due to lack of spare time (what's that?!) and the need to set up a suitable antenna range facility.

That said, day-to-day use of the 1090 MHz 28-element Yagi suggests a good pattern.

The method certainly results in an antenna that is strong but light, and minimises the cross-sectional area of the boom. Use of the N socket in the dipole assembly obviously means that connecting multiple antennae together in an array involves using coaxial cable and a power divider.

I will be interested to see if anyone can come up with a method of constructing a dipole assembly that will suit connection to balanced feed-line.

I would like to acknowledge the following for various ideas and assistance in getting to this point: Gordon MacDonald VK3EJ, John Drew VK5DJ, Jim Klitzing W6PQL, and Alan Devlin VK3XPD.

All photographs were taken by Barry Miller VK3BJM, Cameron Miller and Adrienne Walker.

News from

Tim Mills VK2ZTM
arnews@tpg.com.au

VK2

Seasons Greetings and all the best for 2010 – the Year of Celebrations! The year opens with much local activity.

There is a suggestion that **VK2WI** will be operating across New Year's Eve and into the New Year.

The weekend of the Summer VHF/UHF Field Day 14/15th will be the operation by members of the **CCARC** from Mt. Kosciusko as reported in last month's notes. On Sunday 24th will be the **Radio Expo** conducted by the **Mid North Coast ARG** in Coffs Harbour. The first of the **Trash & Treasure** events at VK2WI will be on Sunday the 31st.

In February the **Central Coast** Field Day will be conducted by the **CCARC** on Sunday the 28th at the Wyong Racecourse with the Dinner on the evening before hosted jointly the **CCARC** and **ARNSW**.

Summerland ARC has Standard Licence theory courses planned on the weekend of 27/28 February, theory and exams on the 6/7 March with Regulations and exams on the 13/14 March. Contact Duncan VK2DLR on 02 6628 1337 or draymont@nrg.com.au Their WICEN group will be helping out at the Eden Creek Horse Enduro over the weekend of 20/21 February; May 15/16 and July 10/11. Contact John VK2JWA. Summerland having just celebrated their 50th – they have Anniversary Badges available, collect at $4 or posted $4.60. Wind and dust from recent storms wrapped a coax into the wind generator blades and shaft at their Pretty Gully repeater VK2RBR. Repairs were carried out and the antennas were changed along with other maintenance.

The last morning and evening news session from **VK2WI** for the year will be on Sunday 20 December. Then it is the summer morning only format for three weeks. Both sessions will resume on January 17. The **VK2BWI** Morse training session on Thursday evening conducted by Ross VK2ER will stop from mid December and resume on 4 February.

Also the **Hunter Radio Group** VK2AWX Monday evening news will cease after 7 December and restart 8 February. Also many radio clubs take a break from meetings in January. All clubs are asked to let **VK2WI NEWS** (news@arnsw.org.au) know of their arrangements so it can be included in the bulletins.

The **Orange & District ARC** has a venue change for their December meeting from the usual RAAF building to the SES headquarters on the 4th.

The **Manly Warringah RS** are celebrating their 75th anniversary about now. The exact formation date of the Society is not known, advised Richard VK2SKY.

They are also planning to participate in an event this month to mark the 100th anniversary of the first heavier-than-air flight in Australia, by George Taylor. That flight took place at Narrabeen on Sydney's Northern Beaches. Taylor was also a founding member of the Wireless Institute of New South Wales in 1910. Manly Warringah RS now meet at the 1st Terrey Hills Guides Hall, Beltana Ave, Terrey Hills on Wednesday at 8 pm.

Amateur Radio New South Wales has altered their telephone and email. The 1-800 Freecall number has been discontinued, but the Secretary has a mobile 0400 445 829 for direct contact. The office number 02 9651 1490 goes to a message bank which is checked usually daily. FAX 02 9651 1661. To contact the office email office@arnsw.org.au

VK2WI news submission is now news@arnsw.org.au Previous email addresses are redirected but will soon go. The VK2WI station phone during broadcast times is 02 9651 1489. The web address for the weekly news text and information about ARNSW is www.arnsw.org.au Postal address is P. O. Box 6044 Dural Delivery Centre NSW 2158. The site address is 63 Quarry Road, Dural. The Dural 'shed' fit out was completed in late October, leaving some storm water systems to be connected – then final inspection.

St. George ARS maintain the western Blue Mountains repeater VK2RDX 6650 – Mt. Bindo – and raise funds to cover the site fees. One method is a 'Christmas pie order' and these will be available at the December meeting on the first Wednesday. The **Waverley ARS** in Sydney's eastern suburbs conduct regular exams. Send an email to exams@vk2bv.org or contact Simon VK2UA 02 9328 7141. The web site is vk2bv.org

The **Mid South Coast ARC** have their next quarterly meeting in February – usually the second Saturday - at Milton.

The **Oxley Region ARC** will not have a December evening meeting and the November gathering was replaced with the annual Christmas Party. There is a general meeting on the first Saturday afternoon in December at the SES building in Central St. Port Macquarie.

The **Mid North Coast ARG** Radio Expo on Sunday 24 January 2010 will be the first major field day in VK2 in WIA's Centenary. There will be over 20 exhibitors including the trade with all major brands on display and at special Radio Expo prices. Also displays of DRM digital short wave radios, historic and vintage radios and the Elecraft range of amateur kits. There will be representatives from the WIA, ALARA and local clubs.

Full details in the advertisement on facing page.

What's in a name? **The NSW Division** has owned two properties. The first at St. Leonards on the lower north shore of Sydney - from 1959 to 1982 - was called 'Wireless Institute Centre'.

The next was at Harris Park, near Parramatta - 1982 to 2006 - and was called 'Amateur Radio House'. The Dural property which was purchased in 1955 as a 'Home for VK2WI' never developed a name of its own. Now that the 'shed' construction on the site is almost finished - will it achieve its own name?

Known at intervals during its development as 'The Shed', 'A Depot' or 'A Barn' what does the future hold ?.

Seasons Greetings and all the best for 2010 – a Year of Celebration.

73 – Tim VK2ZTM.

AUSTRALIAN SCOUT JAMBOREE AJ2010

Fishers Ghost Amateur Radio Club is gearing up for the 2010 Australian Jamboree in January 4 to 14, with setting-up over the preceding week

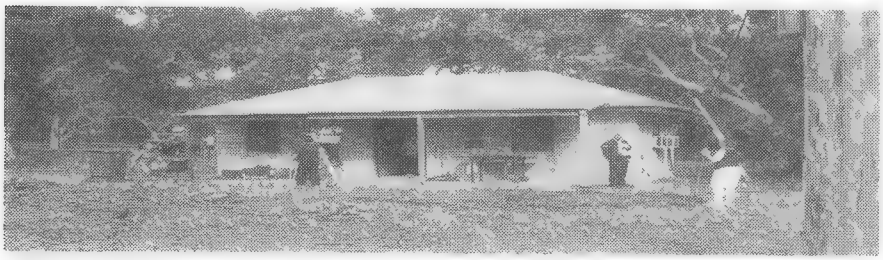

Members of Fishers Ghost ARC tidying up the exterior of the amateur radio building at Cataract Park in preparation for the Australian Jamboree 2010.

Members have been busy upgrading the dedicated amateur radio building at Cataract Scout Park.The surrounding grounds and exterior have been tidied up and the interior has been modified into six individual operating stations.

There are at least 10,000 registrations for the Jamboree as well as over 3000 Scout Leaders. As amateur radio is an elective activity, the numbers will be about 250 per day.

Tents have also been organised in which there will be various activities and passive displays to interest the Scouts.

They expect to run all bands from 80 M to 70 cm, satellite, basic fox hunts, simple Morse code between on site venues, etc, with general activity throughout the day. Night operations will be for licensed amateur scouts and leaders.

The intention is to generate interest within the Scout ranks and provide them with information so they can study for the Foundation Licence when they get home, no matter which State they come from.

Further information can be obtained by contacting Wal Kelly on 02 4626 8423 or email vk2zwk@wia.org.au.

Fishers Ghost Amateur Radio Club, on behalf of Scouting Australia NSW Branch, would like to express their appreciation and thanks to the following for donations.

Without this assistance, the upgrade of the building would only be a wish and not a positive outcome:

Dick Smith Foods, BHP Billiton Coal & Allied, Rojone Pty Ltd, Brian's Secondhand City Campbelltown, ICOM, WIA, Bunnings Campbelltown, The General Manager of Bing Lee Campbelltown for a personal donation, CSR Insulation, Hepworths, Ted VK2AU, Ian VK2FIAN, Lynn VK2FLMK, Karl VK2HKF, Bernd VK2IA, Craig VK2KDP, Victor VK2KVH, David VK2NU, Luis VK2TAR and Wal VK2ZWK.

Thanks also to FGARC members who have willingly given their time and labour in undertaking this work.

Call sign VI2AJ2010 will be used over the period of the Jamboree and QSLs should be to VK2FFG via the WIA QSL Bureau (www.wia.org.au) or FGARC, PO Box 35N, Campbelltown Nth, NSW, 2560 (fgarc.org).

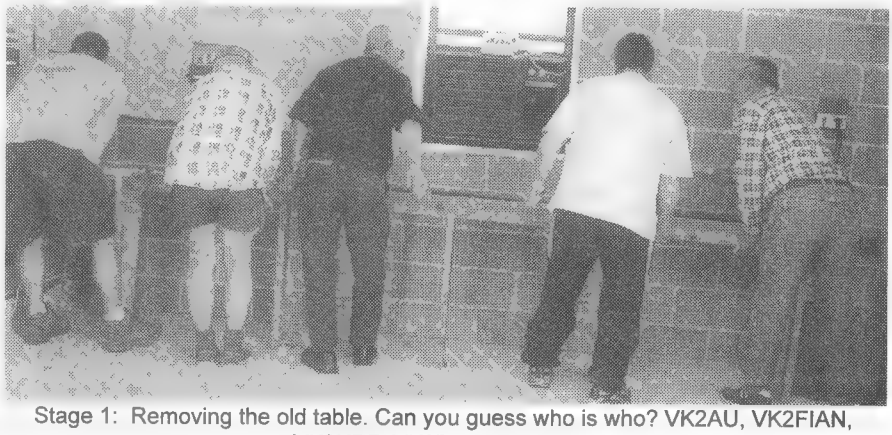

Stage 1: Removing the old table. Can you guess who is who? VK2AU, VK2FIAN, VK2KDP, VK2TAR, VK2ZWK.

Radio Expo Coffs Harbour

Hosted by the Mid North Coast Amateur Radio Group Inc

Sunday 24th January 2010

at St Johns Church Hall Mc Lean Street Coffs Harbour

Doors Open 8.30 am Show closes 1.30 pm Over 20 Exhibits All Major Brands of radios at special show prices

Disposals Trade Displays Historic Radio Display

Emergency Services Displays Club Displays WIA - WICEN

Home Brew Live Demos Guessing Comp - Tech Quiz Kit Sales and more

Entry only $5.00 per person Under 12 Free entry Lucky door prizes every hour

Hot and cold food sales FREE TEA and COFFEE

All major displays under cover Disabled access

Talk in on local Coffs City Repeater 146.750 CTCSS 123 Hz

More Info go to www.mncarg.org or call on 02 66552990

News from VK3

Jim Linton VK3PC
Website: www.amateurradio.com.au
Email: arv@amateurradio.com.au

Season's Greetings

On behalf of the Amateur Radio Victoria Council – Ross Pittard VK3CE, Barry Robinson VK3PV, Peter Mill VK3APO, Keith Proctor VK3FT, Terry Murphy VK3UP and myself, compliments of the season to all and best wishes for a Happy New Year.

A reminder that the office at 40g Victory Boulevard, Ashburton, will close at 1 pm on Tuesday 15 December and reopens Tuesday 9 February. During the break urgent matters will be given priority while office-bearers work on financial statements, stocktaking and the annual audit.

The office is primarily to process mail, membership applications and renewals, some public inquiries, keep the QSL bureau up to date and assist with membership services.

Thank you to the small but dedicated team of volunteers involved in administrative matters at the office, the VK3 QSL bureau, handling incoming mail, faxes and phone calls. The work that you do is greatly appreciated.

The Foundation Licence Training and Assessment Weekend held last month saw the Education Team clock up four years since the restructuring of the licence system.

Recently the question was asked how many new radio amateurs have passed through those weekends. Well honestly the team has lost count, there are hundreds including many who have come back and upgraded. In all around 50 assessment sessions have been held since November 2005.

Prepare for emergencies

With the beginning of summer radio amateurs are now giving thought as to how to keep their station on air in severe weather conditions that could result in power shortages, storms or fires.

This will enable them to continue to enjoy amateur radio should the power fail, but also it may assist them in learning more about summer bushfires in their area.

Last summer 'self-help' groups of radio amateurs regularly got on their local repeater to keep in touch and share information. To do this of course it is essential to have an independent power source. A diesel or petrol generator can be used to not only keep your radio on air but also give energy for lighting or other household uses.

Many seem to have a back-up 12 V battery to keep their rigs on air. These are relatively affordable if bought new and cheap second-hand. Emergency service authorities also recommend having spare batteries on hand for torches and a battery or wind-up powered broadcast receiver to keep up with the news.

So this summer have a think about how to stay on air. Amateur Radio Victoria encourages the use of the major 2 m repeaters to keep in touch, particularly on days of total fire ban.

Should WICEN (Vic) or anyone else need any repeater to pass emergency messages please give them priority, or follow the guidance of any emergency net control station on a repeater.

On the HF bands there are a number of designated Emergency Centre of Activity (CoA) frequencies. Within the Asia/Pacific Region these are 3.6 MHz and 7.110 Mz, and globally the CoA include 14.3 MHz, 18.160 MHz and 21.360 MHz. During emergency training exercises and disasters please keep them clear.

Centre Victoria RadioFest

All of the main commercial traders have given their endorsement for the major amateur radio event at the Kyneton Racecourse on Sunday 14 February.

The Centre Victoria RadioFest No. 3 is steadily receiving bookings too from second-hand sellers wanting to have a table or car-boot sales space. Club and groups are progressively indicating they want to be part of the event too with a spot in the Club Corner precinct.

Thank you to those Amateur Radio Victoria members who have volunteered to help out on the day, which will begin very early with setting up the venue, throughout the day with various tasks, then packing it all up at day's end.

The Organising Committee is putting final touches on the program of activities. It is shaping to be another very interesting and not to be missed event. For more information keep a watch on the website radiofest.amateurradio.com.au

Membership inquiries

To join and support the state-wide organisation Amateur Radio Victoria costs $30 for Full or Associate membership and $25 Concession, for two years. New members are most welcome and an application form can be found on our website or posted out on request.

Geelong Amateur Radio Club – The GARC

Tony Collis VK3JGC

Club Matters!

On the domestic front, the GARC club house is in the process of a substantial make over internally by virtue of the interior decoration and re-organization of the Library (cataloguing), workshop and shack but also attention has been paid to the external look of the building and landscaping the front.

This has largely been under the control of Barry VK3FWGR, organizing work groups, and Vanessa VK3FUNY and Jenni VK3FJEN.

At a recent barbeque an auction was held of items donated by club members. This proved to be a very entertaining session chaired by Chas VK3PY, assisted by David VK3QM, and raised $350 for the club coffers.

It is of interest to note that there has been a significant revival of interest in Morse code training within the club by licensed club members, no pressure now, as a result of which classes take place under the guidance of Owen VK3OWZ, between 6 and 7 pm each Friday.

For information on December activities at The GARC go to http://www.atl.org

Amateur Radio
Victoria
This major amateur radio event is on
Sunday 14 February 2010
At the Kyneton Racecourse
an hour from Melbourne, Ballarat and Bendigo.
Proudly supporting the WIA centenary celebrations.
Sales space bookings and more info:
www.radiofest.amateurradio.com.au

The 2009 Remembrance Day Contest Results.

Peter Harding VK4OD

I received a total of 310 Logs compared to 314 last year, with 1 log again for the receiving section only.

The overall points totalled 42,356 points compared to last year's total of 36,341.

I believe that we can attribute the slight drop in the number of logs to the Lighthouse Event and the RD Contest falling on the same weekend. Unfortunately, this is going to occur from time to time.

Thankfully this year, 219 of the logs were created electronically, the remainder were either hand written or on pre-designed forms that I made available. This made my task a lot easier and enabled a final result being made available quickly.

Amongst this years entrants were logs from 21 "F" calls, compared to 16 "F" call logs in 2008. Well done! We look forward to more and more "F" calls taking place.

With no logs last year, this year we had three logs in from the " Land of the Long White Cloud". Their certificates will be posted to the ZLs ASAP.

Prior to this years contest, I received a few requests for a section to be made available for operators using WWII Radio Equipment. Disappointingly, we received only two logs.

Once again quite a few of this year's entrants were from club stations running Multiple Operators, Multi Modes and Multi bands.

It is no surprise that VK6 once again will get their name engraved on the RD Trophy as the Winning State for 2009.

Well done to all those who took the time and effort to enter the contest and also posted or emailed in their logs.

By the time you read this in AR, all the Certificates will have been sent out, to all the first, second and third place getters.

Should any questions arise from this years contest, please email them to Peter Harding, c/o vk4od@wia.org.au and I will do my best to answer your query.

Until next year.

Peter Harding VK4OD

RD Contest Manager.

A complete list of results is available on the WIA website at: http://www.wia.org.au/members/contests/rdcontest/

Top Individual stations by Division

Division	Place	Callsign	Points
HF Single Op Phone	1st	VK7ZE	847
	2nd	VK4ZD	679
	3rd	VK4VCH	626
HF Single Op CW	1st	VK4SN	138
	2nd	VK4WM	130
	3rd	VK2BHO	106
HF Single Op Open	1st	VK7GN	843
	2nd	VK2AYD	433
	3rd	VK3HJ	349
HF Single RX Only	1st	VK6ABM	75
HF Multi Op Phone	1st	VK2WIA/P	784
	2nd	VK6NC	760
	3rd	VK1ACA	578
HF Multi Op Open	1st	VK2AWA	1011
	2nd	VK3BJA	440
	3rd	VK4WIS	346
HF WWII Single Op Phone	1st	VK2ABN	94
	2nd	VK3IZ	5
VHF Single Op Phone	1st	VK6USB	700
	2nd	VK6FDX	558
	3rd	VK6KHZ	409
VHF Single Op Open	1st	VK6BDO	612
	2nd	VK6PIG	606
	3rd	VK6WB	493
VHF Multi Op Phone	1st	VK5HZ	303
	2nd	VK6SH	205
	3rd	VK3BJA	183
VHF Multi Op Open	1st	VK6BDO	612
	2nd	VK6PIG	606
	3rd	VK6WB	493

News from VK7

Justin Giles-Clark, VK7TW
Email: vk7tw@wia.org.au

Central Highlands Amateur Radio Club of Tasmania

The Central Highlands Amateur Radio Club member of the year award has been awarded to John VK3MGZ.

The award is passed from the previous recipient to a member who has done something outstanding, or has shown up on the net regularly during the past year.

The club runs a weekly quiz net on 3.585 MHz on Thursday evening at 8.30 pm. Anyone is welcome. Check in time is between 8.15 and 8.30 pm. The quiz is run by the winner of the previous quiz. Thanks Claureen VK3KMB for this news

Claureen VK3KMB presenting the award to John VK3MGZ.

Northern Tasmania Amateur Radio Club

The October dinner presentation by Brendan McMahon from the Bureau of Meteorology was fascinating. A big thank you to David VK7YUM and XYL Norma VK7FOOD for the basket of goodies from Lollydale which was won by Shirley VK7HSC.

The author attended an NTARC coffee morning at Café Lo Ena and caught up with many old friends from the North.

Jamboree On The Air in VK7

JOTA activity this year was in the North and NW of VK7 with Peter VK7KPC assisting with the Perth JOTA station, making contacts with ZL and VK.

The other station in the North was by Tony VK7YBG at Carnacoo. A big thank you Peter, Tony, XYL Anne VK7FYBG, Wayne VK7XGW, Peter VK7PL and XYL Lois for the great scones!

In the North West the group at the Burnie Scout Hall had great contacts to ZL and ito Africa. Thanks to Bob VK7MGW, Lucas VK7FLSB, Dave VK7DC, Kirby VK7KC and Graham Anderson for their help.

Paton Park at North Motton had busy IRLP and EchoIRLP nodes and contacts all over VK. Thanks to Ivan VK7XL, Neil VK7ZNX and Steve VK7ZSJ.

The third NW JOTA location was Camp Boomerang at Port Sorell and HF and IRLP Nodes were running hot along with APRS demonstrations from Jim VK7JH.

Thanks to Jim, Ron VK7RN, Andrew VK7XR, Steve VK7ZSJ and Tony VK7AX for assistance with this JOTA station.

WICEN Tasmania (South)

The WICEN end of year lunch and thank you to our XYLs is December 12 at the Riverview Inn in Lower Sandy Bay. Contact Rod VK7TRF, or any WICEN member if you would like to join us.

North West Tasmanian Amateur TeleVision Group

The NWTATVG WIA affiliation certificate is here and on the club's website. Christmas Dinner is on Wednesday December 9 at the Bass & Flinders Restaurant, Ulverstone, 6.30 pm for 7.00 pm start. All welcome, please let the committee know if you are coming.

Cradle Coast Amateur Radio Club (CCARC)

Our newest Foundation licensee is Scott VK7FTTT. The CCARC Inaugural Christmas Dinner/ Social Evening will be at the Best Western Bass & Flinders Convention Room, Eastland's Drive East Ulverstone on Saturday December 5 from 6:00 pm for a 7:00 pm start. All welcome and please RSVP to the committee .

Radio and Electronics Assoc. of Southern Tasmania

We occasionally have a very special guest along to our ATV Experimenter's nights. On October 14 Ken VK7DY brought along Gary Briant VK3KYF, President of the Sunraysia Radio Group based in Mildura. Gary was interviewed on ATV.

The ATV Group have taken delivery of the new 70 cm DVB-T DATV transmitter components and this is currently being housed in a suitable rack box along with the power amplifier. We are also finishing the new ATV studio and wil soon be up and going in the new studio.

The REAST Saturday Afternoon Groups are happening again over this summer thanks to Tony VK7FTCL, so keep your eye on the VK7 Regional Broadcast and REAST website. Harvey VK7TED has been very active with Ham Radio Deluxe with PSK31 and the PSK-reporter application. Harvey's catch phrase has been "Who said propagation was down?"...HI HI **ar**

Ken VK7DY interviewing Gary VK3KYF on ATV

SILENT KEY - VK7TS
appears on page 52

Ross Hull Memorial VHF-UHF Contest

John Martin VK3KM
Contest Manager

The next Ross Hull Contest will run through the month of January 2010.

Logs will be due by Monday, February 15.

Last year's experiment with a locator based scoring system resulted in a number of comments and a clear indication that there should be a return to distance based scoring.

It has also been suggested that the scoring restrictions for 6 metres should be dropped, at least while we are still in the low part of the solar cycle.

So this year the scoring system returns to the pre-2009 pattern. The band multipliers remain unchanged, except that the multiplier for 6 metres has been increased.

The scoring will be based on the best seven UTC days nominated by the entrant. The length of the contest period should allow everyone to find enough free time to spend in the shack. Entrants can take advantage of band openings during the contest period, while still have time off for other activities or commitments.

In past years some entrants have felt that it is necessary for them to operate on every contest day, otherwise how will they know whether each day could have been one of the best seven? The answer is that there is no need to punish yourself! There will be two good contest days on January 16 and 17, the weekend of the Summer VHF-UHF Field Day.

And any day when there is an opening will be an obvious candidate to be one of the best seven. So, the technique is to just operate as you normally would, but with a better than usual effort on days that are shaping up well.

If you are unable to operate on as many as seven days, give it a try regardless. It could well turn out that your best five days could beat someone else's best seven.

The Contest

The WIA maintains a perpetual trophy in honour of the late Ross A. Hull and his pioneering achievements in VHF and UHF operation. The name of each year's contest winner is engraved on the trophy, and other awards may be made in the various divisions of the contest. The contest is open to all amateurs.

Duration

0000 UTC January 1, 2010 to 2400 UTC January 31, 2010.

In Eastern Summer Time, that is 11 a.m. on January 1 to 11 a.m. on February 1

Sections

A: All bands, non-digital modes.

B: All bands, digital modes.

Digital modes are defined as those in which the decoding of the received signal is done by a computer.

Entrants may submit logs for one or both sections.

General Rules

One callsign and one operator per station. Stations may operate from any location. You may claim one contact per station per band per UTC day.

Repeater, satellite and crossband contacts are not permitted. No contest activity is permitted below 50.150 MHz. Recognised DX calling frequencies should be avoided where possible for contest activity.

Suggested procedure is to call on .150 on each band, and QSY up to make the contest exchange. All rulings of the contest manager will be accepted as final.

Contest Exchange

For Section A, Entrants must exchange RS (or RST) reports plus a serial number. Serial numbers need not be consecutive. *For propagation modes such as meteor scatter or short-lived sporadic E openings, it is sufficient to exchange callsigns plus two further digits that cannot be predicted by the other station.*

For Section B, exchange callsigns plus two further digits that cannot be predicted by the other station.

While not an essential part of the contest exchange, Maidenhead locators may also be exchanged as an aid to distance calculations.

Logs

Logs must contain the following for each contact:

Date and UTC time.

Frequency and callsign of station worked.

Reports and serial numbers sent and received.

Approximate location or grid locator of station worked.

Separate scoring columns for each band would be helpful.

Scoring

Scoring will be based on the best 7 UTC days nominated by the entrant.

For each contact, score 1 point per 100 km or part thereof (i.e. up to 99 km: 1 point, 100 – 199 km: 2 points, etc.)

Multiply the total by the band multiplier as follows:

6 m	2 m	70 cm	23 cm	Higher bands
x 2	x 3	x 5	x 8	x 10

Then total the scores for all bands.

Cover Sheet

Logs must be supplied with a cover sheet containing:

- Operator's callsign, name and address.
- Station location (if different from the postal address).
- Section(s) entered.
- A scoring table set out as the example below.
- A signed declaration that the station has been operated in accordance with the rules and spirit of the contest, and that the contest manager's ruling will be accepted as final.

Please use the format shown at right for your scoring table. If you wish you can cross-check by adding the daily totals across the table, but please make sure that you include the separate band totals.

A cover sheet and scoring table has been included in the postings on the WIA web site. Copies can also be obtained from the e-mail address given below.

Penalties

Minor errors may be corrected and the score adjusted. Repeated use of recognised DX calling frequencies (especially when the reports indicate strong signals) may lead to disqualification. Inclusion of any false log entries will lead to disqualification.

Entries

Paper logs may be posted to the Manager, Ross Hull Contest, 3 Vernal Avenue, Mitcham, Vic 3132. Electronic logs can be e-mailed to vhf-contests@wia.org.au Acceptable log formats include: ASCII text, RTF, DOC, XLS, MDB or any Open Office format.

Logs must be received by **February 15, 2010**. Early logs would be appreciated.

Note on Calculating Distances

Absolute accuracy is not required. You just need to know whether each station is above or below the nearest multiple of 100 km, so you can use a compass to draw 100 km circles around your location on a map.

A more accurate method is to use six-digit Maidenhead locators and a computer program that can be obtained from the WIA web site.

A sample of the Summary sheet, including scoring table, is on the Contests section of the WIA website.

ar

Date	6 m	2 m	70 cm	23 cm	etc		
Day 1	xxx	xxx	xxx	xxx	xxx		
Day 2	xxx	xxx	xxx	xxx	xxx		
Day 3	xxx	xxx	xxx	xxx	xxx		
Day 4	xxx	xxx	xxx	xxx	xxx		
etc.							
Total	xxx +	xxx +	xxx +	xxx +	xxx	=	xxx (GRAND TOTAL)

TET-EMTRON

Antenna Manufacturers

New Tet-Emtron Vertica

Range

- All Aluminium with Stainless steel hardware.
- No adjustment needed to main antenna.
- Light.
- Free standing—no intrusive guy wires.
- 1 kW PEP power rating.
- Can be ground mounted or elevated.

The new TET-Emtron Vertical range is designed with ease of use in mind. Tuning is done by the radials when the antenna is in its final position (where possible).The radials can either lie on the ground, be buried or hang fr elevated antenna. The antenna comes with a set of radials that has a

TET-Emtron will be closed during the month of December due to the move of the factory from Victoria to WA. We will still take your calls and your orders, but production will not be up and running again until January. We apologise for any inconvenience. Stay tuned for new models and products in the New Year. Merry Christmas

40 Blackburn Street
STRATFORD
Victoria 3862 AUSTRALIA

Ph: 61 3 5145 6179
Fax: 61 3 5145 6821
ABN: 87404541761

www.tet-emtron.com
Email: rawmar@hotkey.net.au

Antenna	TEV-4	TEV-3	TEV-3 WARC
FREQUENCY	7, 14, 21, 28 MHz	14, 21, 28 MHz	10, 18, 24 MHz
ELEMENT HEIGHT	4090 mm	3800 mm	5025 mm
FEED IMPEDANCE	50 ohm	50 ohm	50 ohm
Max. RADIAL LENGTH	10.7 metres	5 metres	7.5 metres
SWR	1.5 or less	1.5 or less	1.5 or less
POWER RATING	1 kW	1 kW	1 kW

Summer VHF-UHF Field Day 2010

John Martin VK3KM

Saturday and Sunday 16 and 17 January 2010

Logs must be received by Monday, 1 February 2010.

Duration in all call areas other than VK6:

0100 UTC Saturday to 0100 UTC Sunday.

Duration in VK6 only:

0400 UTC Saturday to 0400 UTC Sunday. Please note that there is now a 3 hour difference between the eastern states and Western Australia, because daylight saving time no longer applies in WA.

Sections

A: Portable station, single operator, 24 hours.

B: Portable station, single operator, 8 hours.

C: Portable station, multiple operator, 24 hours.

D: Portable station, multiple operator, 8 hours.

E: Home station, 24 hours.

Entrants may enter more than one section.

Operating periods:

Stations entering the 8 hour sections may operate for more than 8 hours, and select which 8 hour period they wish to claim for scoring purposes.

If a station operates for more than 8 hours, it may enter both the 24 hour and 8 hour sections.

If the winner of the 24 hour section has also entered the corresponding 8 hour section, his log will be excluded from the 8 hour section.

Two operators:

If two operators set up a joint station with shared equipment, they may choose to enter Section A or B as separate stations under their own callsigns, or Section C or D under a single callsign. If they enter Section A or B, they may not claim contacts with each other.

Multi-operator stations:

Stations with more than two operators must enter Section C or D.

Operators of stations in Section C or D may not make contest exchanges using callsigns other than the club or group callsign.

General Rules

One callsign per station.

Operation may be from any location.

A station is portable only if all of its equipment is transported to a place which is not the normal location of any amateur station. Stations may change location during the Field Day provided the station is dismantled and reassembled each time it moves.

You may work stations within your own locator square. Repeater, satellite and crossband contacts are not permitted.

No contest operation is allowed below 50.150 MHz. Recognised DX calling frequencies must not be used for contest activity. Suggested procedure is to call on .150 on each band, and QSY up to make the contest exchange.

Contest Exchange

RS (or RST) reports, a serial number, and your four digit Maidenhead locator.

The Maidenhead locator is optional if it has already been exchanged in a previous contact during the Field Day and neither station has moved since then.

Repeat Contacts

Stations may be worked again on each band after three hours. If the station is moved to a new location in a different locator square, repeat contacts may be made immediately.

If the station moves back into the previous locator square, the three hour limit still applies to stations worked from that square.

Logs

Logs should cover the entire operating period and include the following for each contact: UTC time; frequency; station worked; serial numbers and locator numbers exchanged.

Scoring

For each band, score 10 points for each locator square in which your station operates, plus 10 points for each locator square worked, plus 1 point per contact. Multiply the total by the band multiplier as follows:

6 m	2 m	70 cm	23 cm	Higher
x 1	x 3	x 5	x 8	x 10

Then total the scores for all bands.

Cover Sheet

The cover sheet should contain the names and callsigns of all operators; postal address; station location and Maidenhead locator; the section(s) entered; the scoring table; and a signed declaration that the contest manager's decision will be accepted as final.

Please use the following format (foot of page) for your scoring table. In this example the operator has operated from one locator and worked four locators on each band:

A blank cover sheet, with scoring table, is available on the Field Day page of the WIA web site.

Entries

Paper logs may be posted to the Manager, VHF-UHF Field Day, 3 Vernal Avenue, Mitcham, Vic 3132.

Electronic logs can be e-mailed to vhf-contests@wia.org.au. Acceptable log formats include: ASCII text, RTF, DOC, XLS, MDB, or any Open Office format.

Band	Locators Activated (10 points each)	+	Locators Worked (10 points each)	+	QSOs (1 point each)	x	Multiplier	=	Band Total
6 m	10	+	40	+	40	x	1	=	90
2 m	10	+	40	+	30	x	3	=	240
70 cm	10	+	40	+	20	x	5	=	350
etc.									
Overall Total								=	680

Logs must be received by Monday, 1 February 2010.

Early logs would be appreciated.

DX - NEWS & VIEWS.

John Bazley VK4OQ

E-Mail: john.bazley@bigpond.com

Well it is indeed great to see the sunspot count starting to rise again, let us hope that this time it will prove to be the beginning of the next Solar Cycle.

If this proves to be correct, then we can look forward to a New Year of greatly improved DX possibilities.

Before detailing some of the forthcoming operations it is good to see that the following have been approved for DXCC credit.

TX3A - **Chesterfield Island** - 2009 operation, K4M (KH4 Midway), 3D2ØCR - **Conway Reef and 3D2CV - Conway Reef 2009** Operation, T6AB - **Afghanistan** - 2008 and 2009 operation, T6AF - **Afghanistan** - current operation, credit for YI/KV4EB has been extended through 9 January 2004 (originally it covered the period from 20 April to 28 November 2003), the recent FT5GA operation from **Glorioso**, 5N0OCH (**Nigeria**, current operation) and 5N0EME (2009 operation) and finally the current operation by D2QMN.

So now to DX.

Good to see that TL0A, Chris is active again after a holiday in France, and an opportunity to catch up with QSLs (see photograph of his current QSL below). He can usually be found, most days, on 17 m or 20 m SSB.

John 3B9/G3LZQ is making plans for the annual RSGB Commonwealth Contest which takes place in March 2010. It will also be a serious vacation to **Rodrigues Island** with some amateur radio being an important part of the trip. He will be staying at the Cotton Bay Hotel (which was the site of the March 2004 3B9C DXpedition and the operation by Nigel G3TXF in February 2007) between March 3rd and April 2nd 2010.

Activity outside the contest will be focused on the low bands, provided the QRN is manageable. John has applied for the call 3B9/G3LZQ. His equipment will include a K3 and Expert 1K-FA Amplifier plus two 18 metre and two 12 metre Spider Poles and four lightweight 10 metre fibreglass poles to "accommodate" his top loaded 160 metre vertical, 80 metre vertical, and a pair of verticals for 40 metres.

On the high bands John will have a Spider Beam and 10 metre mast. Plans are to have all of the antennas erected very close to the ocean. For receiving he hopes to have at "least one beverage" and a "dual K9AY loop".

John is planning to be on the air daily during his sunrise and sunsets (0145 Z and 1345 Z) and occasionally during his daytime. He is hoping to be able to upload his logs daily to G7VJR's Club-Log.

Mike RW1AI is supposed to depart St. Petersburg, Russia via the oceanographic research ship *Akademik Fedorov* on November 1st. His destination is **Progress Station, in Antarctica**. Mike expects to be there around December 16th and will begin R1ANP activity throughout all of 2010. QSL via RW1AI. See photograph during his last visit there.

David T6AG (CT1DRB) has been working for the past month in **Afghanistan** and is currently on a six month (plus or minus) work assignment. He was issued the callsign T6AG. His landlord finally gave him permission to install antennas and has been QRV on 30 metres CW.

In the future he plans to install more antennas for the other bands. He may have problems on 20 m and 80 m as these bands are apparently used by other local military communications. David has a Web page at http://t6ag.nra.pt/ QSL via EA3GHZ.

J5GQZ is Joao Carlos Marino from Portugal, working in **Guinea Bissau** for the next five years, with occasional visits to Portugal for 3 to 5 months at a time.

A second callsign is J5JUA for use with mobile operation. In addition he manages the beacon stations J5SIX and J5TWO. Look for J5JUA mobile in the daytime on 20 and 17.

At night he will use the J5GQZ callsign on 80 and 40 m. Joao installs

Mike RW1AI in Antarctica

communications systems, radio links between the capital city and Guinea Bissau's islands and other remote areas that do not have telephone service. His next return to Portugal is at the end of 2009. Joao is the most active of the four authorized Guinea Bissau stations.

XR9JA is a **South Shetland Islands** (more typically a VP8) callsign that will be activated from January 10th to January 25th.

This activity will be on **Greenwich Island** at the Arturo Prat Chilean Navy Base. The operating team will be XQ5IE, CE6UFF, F6DXE and CE5COX, Luis, Carlos, Didier and Dago. http://www.ce5ja.cl/

5Z0H will be active from **Kenya** by Enrico 5Z4ES, Frank IK8TEO, Tony IK8UHA and Antonio IK8VRH between February 10th and February 21st, including operations from **Wasini Island (AF-067)** and **Lamu Island (AF-040)**.

They plan to have two stations active on 160 to 10 metres CW, SSB and RTTY. QSL via IK8VRH (direct, bureau and LoTW). The website for the operation is at http://www.ddxc.it

Liberia. Chris de Beer ZS6RI is currently working on a project in Liberia, and will hopefully be QRV in late October to early November. He will alternate between working six weeks in Liberia, and then three weeks at home in South Africa, for the foreseeable future.

He plans to operate CW QRP with vertical and wire antennas; if there seems to be activity he might upgrade the antennas and the radio, and operate SSB and digital modes.

VK9X: Phil G3SWH and Jim G3RTE will be active from **Christmas Island (OC-002)** on 20-27 February 2010. They will both use the single callsign of VK9X/G6AY, and they will only operate CW on 80 metres through to 10 metres (no activity on 160 metres).

Propagation permitting, they plan to have two stations on the air for as many hours every day as is possible. QSL via G3SWH, direct or bureau.

Please visit www.g3swh.org.uk/christmas-island.html for further information.

The handwritten log of J79PAK, operated by Pierre HB9CUA (SK), has been transcribed by Jim Spears N1NK and was uploaded to LoTW on Thursday October 15, 2009. 1,430 QSOs were uploaded, 369 QSL matches were immediately made.

This log covers the period from July 11 through August 5, 2009. Francisco EA7FTR is responsible for processing paper QSL requests. Jim is the administrator of the LoTW account. Anyone who expected a LoTW QSL match and does not find it should contact Jim at n1nk@cox.net to resolve any log issues.

Alex YV5SSB updates all DXers on some upcoming activities of the 4M5DX group. A January 2010 operation from **Aves Island (YW0A)** is in the works for three or four weeks. They still need to negotiate the length of stay with the Venezuelan Navy.

The 4M5DX group is also working on a number of IOTAs. First one expected in November to December of this year on **Orchila Island (SA-054)** as YW5O. In February 2010 they will try YW7IOTA from **Coche Island (SA-012)** and in March 2010 from **Patos Island (SA-048)** as YW5P.

Graham 5X1GS has been noticeably absent from the bands over the past few months. There is a good reason for that as he has been on a work assignment in northern Uganda and Sudan, far away from the shack.

On top of this he has moved to a new QTH, with a larger garden so he has room for the tower. So Graham is expected back on the air soon. QSL Manager Bob WB2YQH has all the logs and QSLs quickly.

At last, some more information regarding Vlad UA4WHX regarding QSL cards for his 2005-2007 DXpeditions through **Africa,** the **Indian Ocean** and the **Middle East**.

Vlad says, "We keep on answering requests." He says the bulk of the cards should be out by Christmas, and the rest will be "answered in due time as well". Has any VK station received any QSLs for this trip yet?

So another year has passed and with an unusually high number of DXpeditions which should have reduced the number of 'Countries Wanted' on quite a few lists. I wonder what 2010 will have in store?

So Seasons Greetings to all and good luck in the pile-ups until next year.

Special thanks to the authors of *The Daily DX (W3UR, 425 DX News (I1JQJ) and QRZ.DX* for information appearing in this month's DX News & Views.

For interested readers you can obtain from W3UR a free two-week trial of The Daily DX from www.dailydx.com/trial.htm

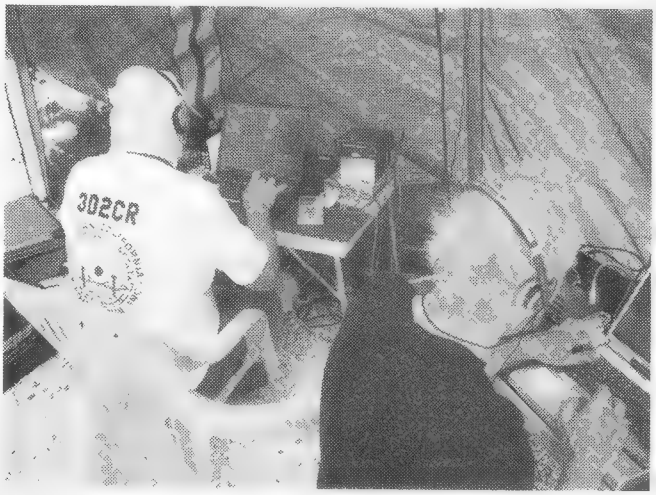

Two of the operators on the recent Conway Reef DXpedition.

FT5GA Team and friends.

News from

Christopher Comollattie VK4VKR
Email: vk4vkr@wia.org.au
qtc@wia.org.au

QTC VK4
First Published July 1927 "Of, By and For the Amateur"
News from for Queensland Radio Amateurs

TARC

Townsville Amateur Radio Club, Annual General Meeting occurred on Sunday 22nd November 2009, tune in to the next issue for full details. TARC Management Meeting Tuesday 1st December from 7:30 pm at SES HQ, Green Street West End, Project Night Tuesday 8th December from 7:30 pm at SES HQ,

THE MAIN EVENT Christmas party Sunday 13th December from 2:00 pm at VK4TJS Satellite Dish City and a Social evening Tuesday 15th December from 7:30 pm at SES HQ. A busy North Queensland December, with an eventful 2010 coming up.

WICEN

WICEN Queensland operates a net every Sunday "rain, hail or shine" on 7.075 MHz from 8:30 am (2230 UTC) If conditions are poor on 7 MHz tune to 3.600 MHz. Call in and get involved, your support and voice is needed for this service.

TREC

Tablelands Radio and Electronics Club assisted the Gordonvale Scouts and Guides 52nd JOTA/JOTI weekend. With John VK4JKL, Tony VK4XL, Stephen VK4WSW and Dale VK4DMC setting up the Amateur Radio Station at the scout hall in Gordonvale.

Many contacts were made with other JOTA stations around VK and contacts were also made with ZL and CN8 stations and a highlight being an AO51 contact with a VK2 station.

TREC Christmas party Saturday 5th December at The Tolga Hotel. Prelunch drinks starting at 11:30 am and the feast begins at around 12:00 midday. On the 12th December, a club social get-together, show and tell followed by a committee meeting will occur at the club rooms.

RADAR

Rockhampton and Districts Amateur Radio Club participated in JOTA at the Guide hut in Rockhampton and the May Morgan Hut in Mount Morgan. Radio amateurs Don VK4BY, John VK4KDN, Jim VK4JYM, Doug VK4DUG and NickVK4CNQ assisted Margaret Hale OAM Guide Leader. Margaret has been active with Girl Guides since 1947. Don VK4BY fired up his TS-430 connected with a long wire antenna and with all 37 Guides making contact with VK4FNQ on HF.

Margaret smiled somewhat when she made a contact with someone that she had known since first starting with Guides. John VK4KDN helped the Guides with a battery operated Morse key and not long after translating the Morse that was being sent by the Girl Guides themselves. As the day progressed, so did the local bush fires with the Scouts having to be evacuated from Seeonee Park.

All were watching as the fire bombing helicopter and fixed winged aircraft made attempts to water bomb the inferno. Fortunately, no damage occurred to the Scout Den but, sadly, one private residence was lost. Fires continued into the night so for the first time these Scouts missed out on JOTA and JOTI. Many thanks to those mentioned for a well organised, though distracted, weekend.

TRG

Over the weekend 16 -18 October Tableland Radio Group provided Amateur Radio assistance to the Scouts/Guides/Cubs who met up at Malanda on the Atherton Tablelands. TRG involvement commenced a month prior with information sessions to the various groups at their halls. These helped to break down the formality and helped to make the event fun and hence enjoyable.

Setting up on Friday afternoon with a group of scouts/cubs assisting with antenna erection of the inverted V and 11 metre pole triple guyed. Other equipment was the FT-2800, FT-897D and IC-706 plus lap tops, power supplies, ATUs, battery and solar panel plus info on the event and contacts with call signs. Operations commenced about 1730 on the Friday and continued until 2200 with PSK31 and 20 m SSB contacts in Europe.

Saturday saw two young ladies desiring to start at 0545 and continued until about 2300 whilst Sunday started at 0600 and finished about 0900. Activities revolved around the HF SSB and SSTV/PSK31 on 80/40/20 and 15 metres and 2 m FM using the TRG repeater at Butchers Creek, VK4RBP, to the Gordonvale Scouts which the Cairns Amateur Radio Club and Tablelands Radio and Electronics Club were operating. Fires continued into the night.

Ross VK4AQ gave a high Speed CW demonstration, whilst Bill VK4WL operated the digital mode SSTV/PSK31 side of things. The Tableland Radio Group (TRG) provided supervised voice operations, assisted by Pat VK4MUY, Dave VK4FUY, Stan VK4MFA, Alan VK4HBN, Val VK4FAIR, Wilf VK4ZNZ and Mike VK4MIK. Morse training was carried out by Wilf and Mike using a CW trainer where two could practice at a time.

Peter VK4BUG organized, supervised and carried out fault detection/rectification of kit construction. The leaders also did a construction using a piece of board, large nails, wire, torch bulb and batteries to manufacture a basic Morse code light sending device.

A very rewarding experience working with the youngsters and seeing their joy and excitement of working radio and talking to others from near and far. Thanks must go to the many "hams" that set up stations for the event and gave contacts. TRG will be back again next year working the JOTA station call VK4GHL at Malanda.

Ipswich & District Radio Club

A very busy lead up to JOTA for the Ipswich and District Radio Club, It just goes to show how much effort some clubs put in, to prolong the sustainability of amateur radio in Australia. A wonderful display was put on for the Cubs and Scouts of the Taringa Milton Toowong Group. It was a pretty huge event for the Club in general, having two events on the same day.

The first was in appreciation for our local Ipswich Councillor, Mr. Andrew Antoniolli, and the second for the Cubs and Scouts in the evening for JOTA. Leading up to JOTA Mike VK4QS had written to the Commanding Officer of the 9th Battalion, Royal Queensland Regiment, Lieutenant Colonel Mike Bond, as to the possibility of having an Army Radio Vehicle turn up for the day as an added attraction for the young Cubs and Scouts. Colonel Bond

granted the request, and thus, Sergeant Greg Chard, and Lance Corporal Jones arrived in the Army "FFR" Land Rover Saturday morning.

This year was to inspire the Cubs and Scouts with all that amateur radio could offer, plus a bit of "WOW" factor with Army representation on the day.

The refurbishment of the Clubhouse saw operating desks and floor carpets installed, as well as paint on the walls. This was in most part due to co-operation with our local Councillor, Mr. Andrew Antoniolli, as well as the Mayor of Ipswich Mr. Paul Pisasale.

Antennas for the event were in the form of a full wave 80 m Loop, erected in the upper branches of the gum trees to a height of about 15 m. Graham Reuter VK4YEA provided his Cherry-Picker for the day to allow erection of the loop up high. Also, one "F" call member, Graham VK4FGCC, brought along his Squid Pole Antenna that he had made, and set it up in no time for 40 m operation.

One of the focal aspects of the day was the involvement of the Foundation licence members of the Club in the erection of the antennas as well as the operating and interaction with the Cubs and Scouts on the Air.

Upon arrival, the Cubs and Scouts were ushered down to the camouflaged Army radio vehicle at the back of the clubhouse. Sergeant Greg Chard undertook some very basic explanation for the eager onlookers as to how the Army radio worked. The fascination on their little faces said it all. There were allowed to take turns sitting in the rear of the radio vehicle which delighted one and all. Corporal Jones then volunteered to walk up to the Water Tower with some of the Cubs to establish communications with Sgt. Chard at the radio vehicle.

As the afternoon faded into the evening HF communications were established with other Scouts around the country as propagation permitted. This was of limited success, but reverting to the 2 m band allowed us to access various repeaters to work the Scouts as far away as the Gold Coast.

By this time the BBQ was well alight and the savoury smell of BBQ sausages and onion filled the neighbourhood. The children lined up in an orderly fashion and proceeded to enjoy the sausage sizzle under the stars. Towards the end of the evening the Cub Leader Toby Gordon was kind enough to hand out a special JOTA2009 patch to all the radio club members involved. Sergeant Greg Chard was kind enough to give each of the Cubs and Scouts an Australian Army Rising Sun Shoulder Patch for their Scout Uniform. Even Mike's VK4QS own children Zack, and Xavier and their friends Jordan, Summer, Bryce and Reilly also took part in the fun of the day. Not long after this the children lined up out the front of the Clubhouse to recite the Scouts Prayer for us all, followed by a traditional "Scout's Howl" to finish off a very delightful JOTA Event. Baden Powell himself would have been thrilled to bits at the day's results.

Well earned thanks to the following people who volunteered their time to make this event possible: Sergeant Greg Chard, L/Cpl Jones, John Edwards VK4IE, Wayne Brice VK4AB, Warren Heaton VK4GT. Rob Bryce VK4HW, Graham Reuter VK4YEA, Darrin Last VK4FVRX, Tony Costello VK4FAAT, Graham Cotterill VK4FGCC. From the Scouts, thank you Toby Gordon and Ian Lightbody, and all the Cubs and Scouts.

In recent days leading up to this article, the Ipswich Club received a framed Certificate of Appreciation from Toby Gordon and the Cubs and Scouts of the Taringa-Milton-Toowong Scout Group. A personal message from Mike to everyone involved for 2009 JOTA: many thanks and I look forward to seeing you all again next year. Cheers & Best Wishes, Mike, VK4QS, President, Ipswich & District Radio Club. **ar**

Mike VK4QS & Edward

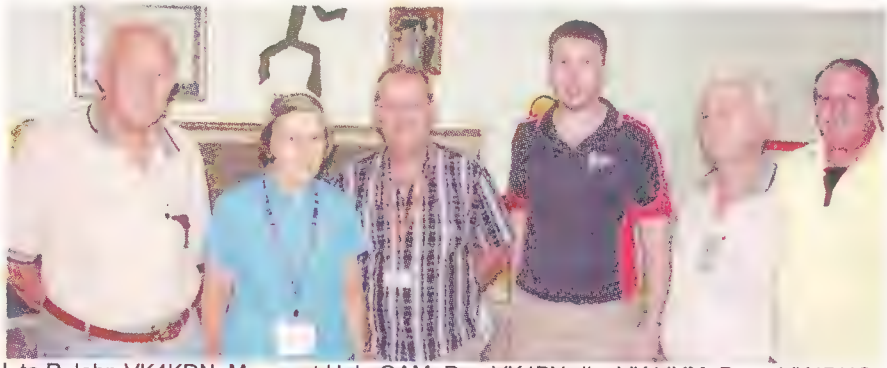

L to R John VK4KDN, Margaret Hale OAM, Don VK4BY, Jim VK4JYM, Doug VK4DUG and Nick VK4CNQ.

Taringa Milton Toowong Group enjoying JOTA.

AHARS

John Elliott VK5EMI

Cold, clarity,calving and weighty matters

October meeting:
Our annual Club construction night, hosted by our construction King, Graham VK5ZFZ, soon had old and new hands (and eyes!) alike beavering over Graham's two tone oscillator project.

Where Graham finds the time (and parts) to supply 50+ kits no-one knows, and no-one dares to ask! Most members had the pleasure of hearing their creations working by the end of the evening.

We were honoured by the presence of John G4GEY and his partner, Susan, on the night. He is from Stockport, near Manchester, in England.

November: Justin Giles-Clark VK7TW will give a talk on his optical communications work. Justin and Rex Moncur VK7MO have featured regularly in *AR*, as they push the limits of communications ever further. Their next goal, I understand, will be to finally span Bass Strait with their optical gear.

December: Our annual Christmas luncheon will be held at a new venue, Mount Lofty House, on the Mount Lofty Summit Road.

January: The club picnic luncheon will be on Sunday January 17th, at the usual Bridgewater Lions Park, near the Old Mill. Chair/s and shade, and whatever, are recommended. Bring salad or dessert to share. Meat and bread provided.

Club Vice President Leigh VK5KLT had some field trip fun visiting sister club OH3NE in Finland. His lakeside log cabin radio site deep in the remote Seitseminen forest was incredibly quiet with almost zero background noise; quite uncanny to experience!

The HF bands were buzzing with signals and plenty of regional European and long path DX from USA, ZS, JA and several VK and ZL stations. A makeshift 80 metre wire dipole strung high between a pair of tall birch trees did an admirable job on 80, 40, and 20 metres.

Even weak signals had 100% intelligibility and copy due to the low background noise floor. Leigh reported that one could easily be mistaken that the antenna coax was disconnected from the rig until you tuned-in to a distant station thundering in loud! The striking difference between living in the northern and southern hemisphere / far away Australia is the large amount of on-air amateur signal activity that one constantly hears. The photo shows the 100 year old 'shoe makers' cabin from which Leigh worked.

100 year old 'shoe makers' cabin near Seitseminen from which Leigh VK5KLT worked.

Our regular contributor, Christine Taylor (VK5CTY), has recently returned from northern Europe, indulging in amateur radio to the extreme. Her radio hosts have been SYLRA (Scandinavian Young Ladies Radio Amateurs, the equivalent of our ALARA). The SYLRA meeting was held in Kolbotn (near Oslo), Norway on 3-6 September, with the special callsign LA1SYL. After that, on 7-11 September, Ingrid LA8FOA, Unni LA6RHA and other YL operators, including Christine, were active as JW1SYL from Longyearbyen, Svalbard, IOTA EU-026.

Just where is Svalbard? Look it up – you will be amazed – it is a real DX location.

Messages received from Christine on her top of the world trip included – 'Have seen and heard a glacier calve; visited a Russian settlement; operated on the radio; tasted whale, seal and reindeer; watched a practice helicopter rescue; had lots of fun.' And that was somehow sandwiched in between visiting the UK, Sweden, Italy and Estonia! (Full story under ALARA).

VK5BUG photo: Club member David 'Doc' Wescombe-Down VK5BUG returned recently from the World Masters Weightlifting championships, in which he managed 5th place in the Over-60 Superheavyweight (105+ kg) class.

He is pictured at Sydney's Olympic Park after the event with Ingrid, his wife, and son Clay. To quote the Doc 'I come in handy for shifting furniture, rack-mounted equipment, and the like, but don't come cheap...!!!'

David Giles VK5DG

CUBESATS for AMSAT

During the AMSAT-NA symposium in October it was announced that AMSAT-NA would construct a Cubesat with a transponder. This follows the AMSAT-UK Colloquium announcement of the construction of FUNcube in August.

What is a Cubesat?

In its simplest form a Cubesat is a satellite that is a 10 cm per side cube and has a mass of less than 1.33 kg. This is designated as 1U size. Cubesats can be twice (2U) or three times this size (30 x 10 x 10 cm and 4 kg). Other design criteria include not using hazardous substances, not using pressure vessels greater than 1.2 atmospheres, total battery capacity of less than 100 Watt-hours and no extra space debris arising from the launch.

The Cubesats are launched from the Poly Picosatellite Orbital Deployer (P-POD) launch container. The P-POD is a square aluminium tube with a door at one end and a large spring to push up to three Cubesats out into space. The P-POD is built into the launch vehicle and a signal to open the door at the right time. Pyrotechnics (explosive bolts) are not needed or permitted. A single or double sized Cubesat will have small springs fitted at one end to separate itself from the next Cubesat in the P-POD.

Cubesats are constructed within an aluminium frame with tolerances of +/-0.1 mm. Since the P-POD contacts the Cubesat along four edges, there is some room for folding antennas and protrusions up to 6.5 mm above the outer surface (e.g. sensors or cameras). All electrical systems will be off (even real time clocks) and batteries discharged before and during launch. A spring loaded deployment switch will connect the solar panels after ejection from the P-POD. Any transmitter greater than 1 mW must stay off for at least 30 minutes after deployment. Like any other satellite, Cubesats have to go through vibration and vacuum baking tests to meet the launch agency's requirements. Typical vibrations can be from 50-2000 Hz at an acceleration of 10 G.

More details including structural drawings can be found in the Cubesat Design Specification [1].

Other launchers have been used in past missions, but they follow the same principle.

Success and failure

The first six Cubesats were launched in June 2003. Of these two were designated with OSCAR numbers: CUTE-I (CO-55) and XI-IV (CO-57). Both are still transmitting 100 mW CW beacons after six years in space. So far ten Cubesats have had OSCAR designations.

So far only two launch failures carrying Cubesats have occurred. The largest launch failure was in July 2006 when 14 Cubesats became part of a large crater just 26 km from the launch site in Kazakhstan.

As at October 2009, 48 Cubesats have been launched. Of these 32 have

AMSAT-VK

AMSAT Co-ordinator
Paul Paradigm VK2TXT
email: coordinator@amsat-vk.org

Group Moderator
Judy Williams VK2TJU
email: secretary@amsat-vk.org

Website:
www.amsat-vk.org

Group site:
group.amsat-vk.org

About AMSAT-VK

AMSAT-VK is a group of Australian amateur radio operators who share a common interest in building, launching and communicating with each other through non-commercial Amateur Radio satellites. Many of our members also have an interest in other space based communications, including listening to and communicating with the International Space Station, Earth-Moon-Earth (EME), monitoring weather (WX) satellites and other spacecraft.

AMSAT-VK is the primary point of contact for those interested in becoming involved in amateur radio satellite operations. If you are interested in learning more about satellite operations or just wish to become a member of AMSAT-Australia, please see our website.

AMSAT-VK monthly nets

Australian National Satellite net

The net takes place on the 2nd Tuesday of each month at 8.30 pm eastern time, that is 9.30 Z or 10.30 Z depending on daylight saving. The AMSAT-VK net has been running for many years with the aim of allowing amateur radio operators who are operating or have an interest in working in the satellite mode, to make contact with others in order to share their experiences and to catch up on pertinent news. The format also facilitates other aspects like making 'skeds' and for a general 'off-bird' chat. In addition to the EchoLink conference, the net will also be available via RF on the following repeaters and links.

In New South Wales
VK2RMP
Maddens Plains repeater on 146.850 MHz
VK2RIS
Saddleback repeater on 146.975 MHz
VK2RBT
Mt Boyne repeater on 146.675 MHz

In Victoria
VK3RTL Laverton, Melbourne,
438.600 MHz FM, - 5 MHz offset

In South Australia
VK5TRM, Loxton on 147.125 MHz
VK5RSC, Mt Terrible on 439.825 MHz
IRLP node 6278, Echolink node 399996

In Tasmania
VK7AX, Ulverstone on 147.425 MHz

In the Northern Territory
VK8MA Katherine 146.700 MHz FM

Operators may join the net via the above repeaters or by connecting to EchoLink on either the AMSAT-NA or VK3JED conferences. The net is also available via IRLP reflector number 9509. We are keen to have the net carried by other EchoLink or IRLP enabled repeaters and links in order to improve coverage. If you are interested in carrying our net on your system, please contact Paul via email.

Become involved

Amateur satellite operating is one of the most interesting and rewarding modes in our hobby. The birds are relatively easy to access and require very little hardware investment to get started. You can gain access to the FM 'repeaters in the sky' with just a dual band handheld operating on 2 m and 70 cm.

These easy-to-use and popular FM satellites will give hams national communications and handheld access into New Zealand at various times through the day and night.

Should you wish to join AMSAT-VK, details are available on the web site or sign-up at our group site as above. Membership is free and you will be made very welcome.

successfully orbited, the other 16 have been in two launch failures. Like other satellites, not all Cubesats launched have burst into life. Some were never heard after deployment, some did not fulfil all of their mission goals. Overall the Cubesats are multinational with over 40 universities, schools and private companies involved. They have been built in ten different countries and launched from Russia, Japan, USA and India. A full list of the missions is at the Cal Poly Website [2]. In next month's satellite review, there will be details of at least eight Cubesats that you can listen out for.

List of achievements

Getting a satellite built, tested and launched is an achievement in itself. Here is an incomplete list of the various mission functions of the satellites so far.

Deployable solar panels
Camera
Advanced solar cell testing
Data transmission protocols
Using a personal digital assistant (PDA) as the main computer
Digitalker and SSTV
Earthquake detection measurement
Biology experiment
GPS receiver
Sun sensor
Earth sensor
Star sensor
Spectrometer
Gyroscope
Magnetometer
Magnetorquer
Reaction wheels
Radiation measurement
De-orbiting system
ION thruster
Microwave transmitters, beacon.

FUNcube

AMSAT-UK's FUNcube will be similar to AO-7. It will be a 1U sized, 40 kHz wide U/V linear (SSB/CW) transponder with a 70 cm receiver and 2 m transmitter. The proposed telemetry format will be 400 bd BPSK with Forward Error Correction (FEC) similar to that used on AO-40.

The whole FUNcube project is more than just a satellite. Other sections consist of a simple receiver that can be plugged into a laptop USB port or soundcard with matching telemetry decoding software, and an education package with classroom experiments that can be compared with the satellite's material science experiment. The target audience will be primary and secondary school students.

The satellite will have a simple design to fit in a 1U size structure. Apart from the 1 Watt linear transponder it will feature no on-board computer. This goes back to the AO-6/7/8 days when command decoders used hard wired logic.

AMSAT-NA's Cubesat

AMSAT-NA is taking a different approach. Their proposed 1U sized Cubesat will be more like AO-51 but using a design similar to that being tested on the upcoming ARISSat-1.

It will have a U/V FM transponder and use deployable solar panels. While this mode is opposite to AO-51's mode V/U transponders, ground stations will most likely be able to use existing equipment. It is expected to be usable with handhelds and portable antennas.

Most Cubesats use CW beacons and low duty cycle transmitters because of the low amount of power available. An FM transmitter at full power with a 100% duty cycle will need a greater electrical supply than on most current Cubesats. The nearest equivalent satellite currently in orbit is SEEDS-II. This has a 450 mW transmitter that uses an 100% duty cycle FM signal when in digitalker mode. But that is not used 100% of the time.

Given that the sunlight has a power density of 1380 Watts per square metre and a solar panel will convert typically 15% of that to electricity, then a Cubesat with only 100 cm^2 facing the sun can produce about 2 Watts total power. This has to supply all onboard equipment and keep the batteries (if used) fully charged. To increase power either a larger satellite is used or extra solar panels.

Deployable panels are used on Cubesats CUTE-I (CO-55) and Delfi-C3 (DO-64). Unlike FUNcube it will have an onboard computer. No mention of a software defined transponder like ARISSat-1 was made. Some details of previous satellite designs have been made openly available and AMSAT-NA will continue this with the new Cubesat. It is hoped that other satellite teams will use AMSAT's designs for their own projects.

As announced at the 2009 AMSAT-NA Symposium, this Cubesat's design will be effective immediately using current skills and technology [4]. Total cost will be in the order of US$100k.

Compared to an AO-51 size microsat costing US$400k to US$800k (or US$10 million for the Intelsat ride or P3E), it is currently affordable. AO-51 and SO-50 are showing their age and SumbandilaSat (SO-67) will not last more than 5 years.

In addition AMSAT-NA will be directly involved with two other Cubesat projects. The University of Florida is developing SwampSat; a Cubesat to test a gyroscope controlled attitude system. This will allow the satellite to rapidly and accurately orientate itself in space [5].

The other project is with SUNY-Binghamton (State University of New York) and the IBM Systems Engineering Integration Center. They will develop deployable solar panels and super capacitor power systems.

During the 2006 AMSAT Symposium, Lou McFadin W5DID presented a paper on using supercapacitors as an alternative to batteries [6]. The main advantages are unlimited charge discharge cycles and a known voltage versus energy curve. The main disadvantages are that they have not been tried in space and have less energy storage density compared to batteries. He presented a design using a 50 Farad capacitor and an up/down power converter. A current example of an ultracapacitor is 5000(!) Farads at 2.7 volts working.

References

[1] Cubesat design specification http://cubesat.atl.calpoly.edu/pages/documents/developers.php

[2] Cubesat missions http://cubesat.atl.calpoly.edu/pages/missions.php

[3] FUNcube http://www.uk.amsat.org/component/option,com_wrapper/Itemid,278/

[4] News From The AMSAT 2009 Space Symposium http://www.amsat.org/amsat-new/index.php

[5] SwampSat http://www.ufsmallsat.com/mission.html

[6] McFadin L.W. 2006 "A new approach to Satellite Power Systems" from Proceedings of the AMSAT-North America 2006 Space Symposium.

Updates

Tony VK3JED has informed the AMSAT-VK group that the IRLP node for the AMSAT-VK net has changed to 9558. The AMSAT-VK information has been updated.

ANUSAT has been reported as 'nearly dead'. Signals have weakened due to a failure in one off the solar panels. The

Continued foot of next page

VHF/UHF – An Expanding World

David Smith VK3HZ
vk3hz@wia.org.au

Weak Signal

David Smith VK3HZ

With the warmer weather, there has been a bit of tropo activity on the bands.

On the evening of October 17th, Phil VK5AKK in Adelaide heard the VK6REP 2 m beacon near Esperance at 5x2. At 1025 Z, he worked Wally VK6WG in Albany on 2 m at 5x2 over the 1897 km path. Wally is now 98 years old and still going strong.

On the morning of October 29th, Peter VK5ZPG near Adelaide worked Glenn VK4BG near Hervey Bay – a difficult path of 1633 km over land. His report was 4x2. Peter had to drop the guy wire of an HF antenna to turn his 2 m beam in the right direction. There was no sign of meteor or aircraft enhancement so it seems it was a purely tropo enhancement contact.

On the morning of November 1st, a high-pressure cell pushing its way between Victoria and Tasmania produced some lift across the region. Signals were good between Melbourne and Adelaide. Karl VK7HDX turned his beam towards Adelaide and his "K" was heard faintly. Phil VK5AKK was hearing the VK7RAE 2 m beacon at 5x1. At 2145 Z, Karl worked Phil (4x3) on 2 m over 1030 km. They then also worked on 70 cm (4x2).

That evening, with the High heading east, good conditions across the Tasman produced several contacts between ZL and VK2. At 0714 Z, Nick ZL1IU reported hearing Newcastle Ch 5A TV booming in and, first time for a long while, the VK2RSY 2 m beacon at 5x7. Bob ZL1RS and Mark ZL2WHO also reported hearing Ch 5A. Starting at 0730 Z, Nick worked VK2BLS (5x4), VK2AH (5x5), VK2ARA (5x5), VK2QO (5x5), VK2KU (5x5), VK2XTT (5x1), VK2ZT (5x9), VK2DVZ (5x2), VK2MER (5x3), VK2DAG/P (5x3) and VK2KOL (5x5) – all on 2 m. At 0825 Z, Mark ZL2WHO had his first 2 m contact across the pond to VK2ZT (5x2). ZL2DX and ZL1AOX also worked a number of the VK2 stations. At 0904 Z, after several attempts with others, Nick worked VK2ZT (5x1) on 70 cm. At 1008 Z, Nick reported hearing the VK2RSY 70 cm beacon at 5x1.

The following morning, conditions were still holding up. At 1847 Z, Nick ZL1IU worked VK2DVZ (5x8) and VK2ZT (5x5) on 2 m. He also worked Steve VK2ZT (5x1) on 70 cm. Later, at 0000 Z, Nick again worked Steve (5x5) and VK2EI (5x5) on 2 m.

On the evening of November 10th, Rex VK7MO reported hearing the Newcastle Ch 5A TV at good strength. At 1142 Z, he worked Steve VK2ZT on JT65a at –14 over the 1196 km path. Signals built up a little and they tried an SSB contact, but there was not quite enough to make it.

VK3TPR Portable Operations

Peter VK3TPR has once again been operating portable, this time trying some Aircraft Enhancement from under a major flight path. He writes:

We arrived in Bright on Saturday afternoon about 2.30 pm, found a suitable motel (one to the XYL's satisfaction, that is) and then thought about a place for a little AE (aircraft enhanced) radio playing. Bright is in the Ovens River valley and almost totally ringed by hills or mountains. It is also directly under the flight path for jets travelling from Sydney or Canberra to Melbourne.

I was directed by the lady at the Tourist Information Centre to "Clear Spot" on Clear Spot Rd (more like a track) 10 km from town via a circular route. I drove up to this 1000 m high lookout on Saturday afternoon to check it out, seemed pretty good, so the plan was set to be set up at Clear Spot QF33LG at 8.00 am local on Sunday morning.

Finally got 2 m, 70 cm and 23 cm set up by 8.40 am Sunday and pointed to Canberra (about 50 degrees bearing) immediately hearing Chris VK1DO on 144.200 with a 5/9 signal. Chris gave me a 5/4 from my IC-706 - 50 watts into 9-element Yagi. Also worked Chris on 70 cm with the Yaesu FT-897 and 100 watt amp, for 5/7 5/3 reports. I worked Chris several more times over the next hour and a half, even off the back of the beam. No need for AE to hear Chris!

Worked Rob VK3XQ in Yea on 2 m 5/7 each way.

Then started to work Melbourne stations with the beams pointed SE.

Michael VK3KH 5/9 5/7 on 2 m, 5/3 5/1 on 70 cm, but try as we might, Michael and I just could not complete a QSO on 23 cm over the next hour. Michael was spotting the planes on

AMSAT *from previous page*

beacon on 137.4 MHz can still be heard though. A description of ANUSAT appeared in the June AMSAT column.

CP6 has gone silent due to the failure of the communications and data handling processor. The mission has been a success with over 5 Mb of data collected, more than their previous two missions combined.

UWE-2 has been silent but is still functional. The 70 cm beacon has been turned off to conserve power.

CUTE-1.7+APD (CO-56) has re-entered. This happened towards the end of October when it reached a perigee of approximately 130 km.

LUSAT (LO-19) has gone silent just short of its 20th anniversary. The 70 cm telemetry beacon was last heard around the 23rd of October. It is hoped that LO-19 can be revived for its anniversary in January 2010.

Final Pass

It is not surprising that the first AMSAT Cubesat would have an analogue transponder. Now we have two different Cubesats with these to look forward to. For those readers who have not heard any of the Cubesats, I recommend trying SEEDS-II (CO-66) on 437.385 MHz. It transmits CW telemetry, packet telemetry and a pre-recorded voice/SSTV message. Next month'- the six monthly satellite review. **ar**

Plane Plotter and I was reporting to him on 2 m as they flew overhead - I could hear them roar/echo above at 30 - 40 thousand feet. I estimate 15 or more planes went over in 2 hours.

Alan VK3XPD came up with a 5/7 signal on 2 m, was 5/1 on 70 cm and after several attempts (and several planes) we confirmed a contact with 4/1 each way on 23 cm. Later I worked Alan for 5/1 4/1 - perhaps my AE technique was improving.

Worked Jim VK3II on 2 m 5/5 and 5/5.

Worked Andrew VK3OE on 2 m 5/7 5/5 and 70 cm 5/1 each way.

All this time I was liaising with Michael and Alan on 2 m, sometimes receiving signals over 5/9. Somewhere about this time Dave VK3HZ came up with a big signal on 2 m so I worked him a few moments later but signals faded a bit for a 5/1 each way.

Then came the biggest AE lift of the morning, around 10.20 - 10.25 local and very excitedly I worked Alan VK3XPD 5/1 and 4/1 on 23 cm and then Dave VK3HZ 5/5 5/2 on 70 cm and 5/2 5/1 on 23 cm – yippee, good signals at last on 23 cm. For 23 cm portable, I was using a MiniKits transverter with 10 watts into a 24-element Yagi and an FT-817 as IF.

What a great morning - logged over 20 contacts with those listed above. Many thanks to all for being there.

10 GHz Operations

It is good to see more people becoming active on one of the last frontiers of amateur radio experimentation – the microwave bands.

Tim VK3JTM in Ararat reports on his first contact on 10 GHz:

On Sunday 1/11/09, Alan VK3XPD and Russell VK3ZQB tested my recently constructed 10 GHz Transverter. First contact was with Alan at 48.5 km who was received at 5x9+40 and my report was 5x1. Alan was running 8 watts portable at QF12gh to my 320 mW at QF12lo.

I also heard Russell on CW at 128 km with a 529 report one way. Russell was running 2 watts from his home QTH.

I was very pleased to see the transverter working, although it looks like there is still more work to be done fine tuning the feed for better output.

Thanks to Alan and Russell for their time for testing it so far.

ZL Beacon Change

Russell ZL3NW reports that he has changed the ZL3VHF 2 metre beacon antenna from a vertical whip to a horizontal turnstile. The power was also measured at 8 watts to the antenna. ZL3VHF is located in Christchurch and operates on 144.285 MHz. Hopefully this will make it easier for us horizontally-polarised VKs to hear it. Any reception reports would be appreciated.

EME Birdies

Doug VK3UM was measuring his EME system performance on 23 cm recently and noticed that receive performance seemed to be down a few dB. After investigating all of the usual things, he finally did a detailed inspection of his antenna feedhorn. When he removed the Teflon end cover, he discovered that a family of swallows had moved in.

So now he knows that a swallow's nest in the feed is worth 2.2 dB off the receiver. The nest was carefully relocated and a more secure cover was fabricated to prevent any further invasions. The swallows are probably missing that nice warm feeling they encountered during the recent EME contest.

Please send any Weak Signal reports to David VK3HZ at vk3hz@wia.org.au.

Digital DX Modes

Rex Moncur VK7MO

Mt Arden DXpedition: On 10 and 11 October, Barry VK3BJM and partner ventured to Mt Arden in the Flinders ranges to operate from grid locator PF87. On this occasion, Barry took digital modes, which enabled a much wider group of stations to access this rare grid square. Barry reports working 11 stations via meteor scatter using FSK441 on two metres covering VK2, 3, 4 and 7. He worked four stations on two metres JT65 and was good copy in Melbourne at around 900 km with the best distance being to Jim VK3II at 950 km.

10 GHz Digital: Colin VK5DK reports that both he and Russell VK3ZQB have their 10 GHz systems GPS locked and have JT65 working one way and JT6M in the other over a 140 km path between their home stations. Colin says this is a work in progress.

Digital from Norfolk Island 3-14 January 2010: The team of Michael VK3KH, Alan VK3XPD and Kevin VK4UH will be taking digital and propose to work FSK441 on two metres and JT65 on all bands up to 10 GHz using GPS locked equipment. On two metres, FSK441, they should be in meteor scatter range of most of the east coast of Australia and ZL. Also look out for tropo-ducting extensions of meteor scatter as Hepburn often indicates large yellow patches around Norfolk Island that could be used to extend the meteor scatter range to VK5 and VK7.

Bass Strait crossed on 474 THz (Red light): On 27 October Rex VK7MO and Joe VK7JG assisted by Paul VK7KPG achieved one way communication across Bass Strait on 474 THz over a distance of 288 km from Mt Horror in Tasmania to Mt Liptrap in Victoria. Communication was achieved using a new mode "Weak Signal Communications" (WSC) developed by David VK3HZ as an enhancement to the audio spectrum analysis program Spectrum Lab by DL4YHF. WSC can work down to -44 dB and achieves this performance by using very narrow binwidths – in this case 3.8 mHz – at the expense of spending 20 minutes to send two callsigns. Initially both stations beamed just above the horizon and while callsigns could be copied, signals were marginal varying from -50 to -44 dB. Joe suggested he raise the elevation and immediately signals improved and by around 2 degrees became rock solid. Rex then also raised the elevation and signals peaked at -28 dB on the WSJT scale, some 16 dB above the detection limit for WSC. While a few attempts were made to use JT65a the best result was -30 dB without any decode. The following is a simplified example of the output of WSC decoding the callsign VK7JG during the Bass Strait tests:

Time	Freq	S/N	MsgA	MsgB
23:02:01	1038.509	21.5	VK7	
23:02:11	1038.509	20.9	VK7	
23:02:21	1038.508	20.1	VK7	
23:02:31	1038.508	19.2	VK7	
23:02:41	1038.508	18.2	VK7	
23:02:51	1072.957	19.1		JG~
23:03:01	1072.957	20.1		JG~
23:03:11	1072.955	20.9		JG~
23:03:21	1072.955	21.6		JG~
23:03:31	1072.955	22.1		JG~

The first column is the time and is used to identify whether the first or second part of the callsigns is being sent. The second column is the frequency of the tone being sent of which there are some 18,000 possible tones to represent every possible combination of the first or second parts of a callsign.

As binwidths are only mHz, frequency stability was achieved by GPS locking of the sound cards at both ends. The third column is the signal to noise ratio and messages A and B represent the first or second parts of a callsign. The following graph shows the results of this and earlier tests compared to a propagation model outlined by Paul Edwards VK7ZAS in DUBUS volume 1/2009.

From the following diagram it is seen that the 288 km data lines up quite close to the model prediction. This is despite the fact that on the occasion of these tests there was an excess of 3 dB noise due to moon light and the clouds were much higher leading to increased scatter angle and less scatter gain but compensated by lower losses through the air at higher altitudes.

The tests results confirm the modelling and suggest that with the WSC mode and the present equipment it should be possible to achieve a distance of around 350 km.

The successful trial reported above did not occur on the first attempt as it was necessary to find just the right conditions with

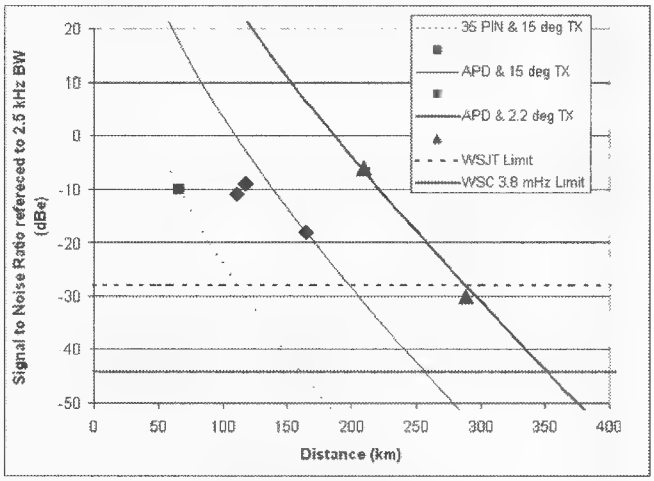

cloud high enough to allow line of sight from both stations to the scattering point and no cloud beneath. It took some 10 days to find the right conditions and some failures due to fog. The support of Brendon McMahon and David James of the Bureau of Meteorology was critical in forecasting the conditions that allowed success. Brendon also produced an excellent post trial meteorological assessment which showed that scattering was from cirrus clouds at around 7000 metres which explains why it was necessary to increase the elevation.

These trials have for the first time shown that scattering from thin high-level clouds is useful for propagation and that a critical element to success is information on cloud height for elevation alignment of the TX and RX.

Please send any Digital DX Modes reports to Rex VK7MO at rmoncur@bigpond.net.au

The Magic Band – 6 m DX

Brian Cleland VK5BC

Activity improved during October with some 'E' openings and meteor scatter continuing to provide many successful contacts but the highlight was toward the end of the month when the Solar Flux rose to the low 80s and there were several TEP openings to JA from most areas of VK4.

Gary VK4ABW from just north of Townsville reports the following:

I have been monitoring 49 MHz a fair bit and updating my database. Not too much to report from up north. I was listening to 49 MHz on Friday night (23rd Oct) and noticed it was getting fairly strong, so I went and checked for beacons on 50 MHz. I heard the JA2IGY and JA6YBR beacons coming in nicely around 1031 Z, so I called on 50.110 CW. Unfortunately signals were way down with a JA3 hearing me but we never completed. Saturday afternoon (24th) the Chinese TV returned with a vengeance at 0601 Z but unfortunately did not produce any contacts on 50 MHz, despite calling for about 15 minutes on CW and SSB.

Sunday afternoon (25th) the 43 MHz data burst transmitter was S7 at 0421 Z and quickly rose to pound the needle +30db by 0426 Z. By 0431 Z the Chinese TV on 49.750 was quickly rising out of the noise and peaked at S9 shortly after. I snooped around on 49.750 and spotted a Middle East TV signal (Ashgabat) at S2, so I then checked on 50 MHz and heard the JA2 and JA6 beacons S2 at 0515 Z. I called CQ on 50.110 and JA3APL immediately responded with a 5/5. We completed the contact and I announced that I was moving up to 50.128. Well ... didn't I drag a dog pile with me! I spent the next hour and 10 minutes working JAs and China. I quickly worked JA3APL, JF1LXO and JR6EXN from 0520 Z till 0526 Z and noticed a station signing D7 in the pile up. I QRZ'd him and got BD7NWF (Vicki) 5/7 just north of Hong Kong, China at 0528 Z. I completed with him quickly as many JAs were still calling. At 0531 Z I then went on to work JA4GXS, JH4ADV, JH6SQZ, JH6RON, JI3CJP, JH1OCO, JA1PVI, JH2LFG, JI1CUL, JA2IVK, JE3TJS, JH3EEF, JR1MLE, JA9SJI, JR3QLC, JA1CCO, JA6TEW, JA1QVM, JA1RJU, JA2DDN, JM1TWR, JM1IGJ, JA1FNA, JA1SST, JA7EVP, JL1MTY, JH2JUG, JA4TOH, JR1USO, JR1LZK portable 2, JH1PWA, JH1KYA, JR1MLT, JA1KQA and JA2IVK rounding it out at 0626 Z. My signal was hopping all over JA, going from east to west many times during the pile up. There was still many JAs calling after 0630 Z but they were rapidly fading down.

Many JAs reported that I was 5/9+ in Japan.

Lloyd VK4FP in Townsville also worked the BD7 and a couple

of the JAs but could not hear the stations that I worked at the beginning and end of the opening. This appears to be due to my angle of radiation as Lloyd is not far from my place.

A little further south Kevin VK4BKP in Mackay reports working several JAs between 0455 and 0523 UTC on the 24th Oct. Stations worked as follows:

JA1RJU 5/9, JM1TWR 5/9, JH6SQZ 5/9, JM1WBB 5/9, JK1TWQ 5/7, JA1CUL 5/8, JA1VZV 5/5.

Then on 25th Oct Kevin again worked a further 4 JAs between 0515 and 0519 UTC.

Andrew VK4KAY also in Mackay reports hearing the 49.750 MHz Chinese TV carriers on both the afternoons of the 24th and 25th Oct. On the 24th there was dog pile of JA stations on 50.110 but Andrew only managed to work JA1RJU around 0500 UTC.

The JA openings on the 24th and 25th also extended down as far as the Hervey Bay area with Paul VK4MA and Wade VK4WM working many JAs (CW). Wade reports further openings on the 26th Oct when he worked JA2HCB, JN1NDY and JA1FNA (all CW) between 0559 and 0626 UTC and then on the 30th working a further 5 JAs (2 SSB and 3 CW) between 0411 and 0440 UTC.

On the 30th Oct the JA opening extended as far south as the Gold Coast with Brian VK4DDC working several JAs.

Ron VK4DD in Brisbane reports hearing Paul VK4MA working several JAs in CW on the 28th Oct and although hearing the JAs could not complete a CW contact but did finally work JN1NDY in SSB.

Further news from Bob ZL1RS:

We are going back to Rarotonga mid November for another visit (Barbara and I love the place). During this trip Victor E51CG and I will install the 6 m beacon supplied from Dave N3DB and "The Worldwide 6 m Beacon Project Inc" guys. Some preliminary beacon information is available on my web site at http://www.qsl.net/zl1rs under the "Where in the world is Bob going next?" link. Hopefully there will also be some more early openings in the new Es season while we are there, and we can get a few 6 m QSOs in!

I will also be taking a 7-element YU7EF 6 m Yagi that I built for Warwick E51WL on Penrhyn Atoll in the Northern Cook Islands (separate DXCC entity). When we are in "Raro" we will ship the Yagi up to Warwick via the "island trader boat" ... so we can expect him to be about on the band this summer as well. Warwick has a short boom 5-element Yagi at the moment but the extra few dB of gain from the bigger Yagi will make a difference when it counts. I understand he wants to try 6 m EME and so is building an amplifier to make that possible.

Thanks Bob for all your efforts to get E51 activated and the good news is that Victor E51CG has heard two KH6 beacons and worked KH7Y and KH6HI during October. Victor on one occasion also heard K6FV/b from California and listens for the VK/ZL beacons most days following the ANZA 14 MHz net at around 0515. Hopefully during December we will hear Victor in VK/ZL.

Meteor scatter digital activity is continuing early each morning and Brad VK2QO reports that October has been one of the better months for scatter thanks to the Orionids and Taurids with many contacts being made on 50.200 in SSB and CW also 50.220/230 with the digital modes. Scott VK4CZ has the most contacts for the month with 26 the best day being the morning of the 10th Oct working Dave VK1DJA 5/3, Brad VK2QO 5/2, Norm VK3DUT 5/1, Brian VK4EK 5/1, Peter VK5PJ 5/2, David VK7AAD 5/1, Glenn VK7AB 5/1 and Joe VK7JG 5/7.

Brad is offering the following certificates for scatter contacts that are confirmed each way during 2009;

- longest distance on SSB, CW and Digital,
- first ZL confirmed in either SSB, CW and Digital (limited offer till 1st ZL contact on 6 m),
- all states worked (VK1 to VK8 only) in any mode,
- VK9 any mode.

So make sure you record your contacts and the distance from the stations worked.

They will be designed by the person that designed his new QSL card and will be laminated and sent free of charge.

During the month there were several 'E' openings, most of them of short duration. The best opening was on the 23rd Oct with a good opening from VK4 (Brisbane area) to VK2, 3 and 7. Ron VK4DD reports the band was open for 1.5 hours when he worked 2 x VK2s, 7 x VK3s and 4 x VK7s. The same opening Doug VK4ADC worked VK3OE and VK7AAD and Brad VK2QO reports working Phil VK4FIL 5/9, Harvey VK4AHW 5/3, Ron VK4DD 5/9 and Les VK4ALH 5/5.

On the 30th Oct John VK4FNQ Charters Towers worked Brian VK5BC and Bill VK5ACY.

Lets hope we have another good summer 'E' season with some good multi hop openings to A35, E51, DU7 etc. and that the new sunspot cycle starts to improve.

A late update from Victor E51CG in Rarotonga:

The E51USA Beacon is now on 50.051 MHz - 20 watts into a 5-element beam at 58 feet. Thanks to Bob ZL1RS and Barb who are here at the moment looking for smoke and flames from the beacon ... and thanks to all who helped with this project.

Please send any 6 m information to Brian VK5BC at briancleland@bigpond.com **ar**

SILENT KEY - VK7TS

Trevor Spargo passed away on Tuesday 20 October 2009.

Born in South Africa, a surveyor by profession, he worked in Holland and Switzerland before coming to Tasmania in 1959. Trevor was an active amateur radio operator, always chasing the "Holy Grail" of amateur radio..... the DXCC and was hoping to achieve this during the next solar cycle.

He was also very much an outdoors man, a life member of the Lindisfarne Sailing Club, a member of various walking clubs and a keen photographer. Flying radio controlled model aircraft was his last outdoor activity before his illness stopped him participating.

Trevor also believed that all AR operators should be a member of the WIA as they are the only governing body who can negotiate on behalf of all Hams. For a period of time he was the QSL manager for the Southern Branch of the WIA now REAST.

For this past year or so Trevor was able to keep in touch with Amateurs and friends by video links on his computer.

VK7TS will be sadly missed by his wife Sheila, sons Neil and Nick, daughter Lorraine and all his grandchildren.....not to mention all his AR friends.

Vale VK7TS. (Bill VK7KBG)

Aysha Venugopal VK5FASH

30 years and 16,526 km

It is not everyday that an ALARA sponsored YL gets her 30 year membership certificate handed to her in person and in her own country. However, when it does happen, it is a rare occasion.

This is exactly what Dot Bishop VK2DB did for her German sponsee Christa DJ1TE when she added a German leg to her trip to Switzerland with OM John VK2ZOI and their son Ben VK2FBRB in late October.

Dot said, "I have sponsored Christa for years and met her on radio but really never thought I would meet her in person. First we had a wonderful week in Switzerland riding trains and walking kilometres each day. One day as we were travelling back to our hotel in the dark at 6 pm, it snowed. For a Sydneysider, it was magic to see snowflakes drifting by and settling on post and rail fences."

After a week in Switzerland, they took a train to Karlsruhe in Germany where Christa and husband Jo met them.

"I recognised Christa as she was the only lady at the station talking on a 2 m handheld and not a mobile phone. I had previously called her on a simplex frequency but she did not hear me with all the station noise. While staying there I formally presented Christa with her ALARA 30 year Continuous Membership card."

They also visited the beautiful old monastery at Maulbronn and a Besen in the wine growing area. A Besen is a restaurant set up in a family home, serving traditional dishes made from food grown in the local area. They are only open a few weeks every year with a broomstick out the front to signify when they are open.

"We shared a long table with others and every now and then people would burst out in loud, drinking, with songs - lots of talk, laughter and noise," reminisces Dot.

With Nina DL2GRC, another YL who Dot sponsors into ALARA, they were able to visit the proud old university town of Tubingen and the Hohenzollern Castle.

78° North. YLs gather inside the Arctic Circle

and VK5CTY is there to report

It was a rare occasion this year when the YLs of Scandinavian Young Ladies Radio Amateurs (SYLRA) embarked on a rare polar DXpedition to the Svalbard Archipelago, the northernmost DX in Europe.

SYLRA is hosting this rare treat due to popular demand of the YLs as a finale to the SYLRA 2009 meet at Kolbotn near Oslo (Norway) from 3-6 September 2009. The last expedition was the Polar YL meeting 1998 at Longyearbyen, Svalbard.

Here is a special report from ALARA YL Christine Taylor VK5CTY who went on this expedition:

An International Adventure on Svalbard

I was fortunate enough to be able to attend a YL International meeting in Norway. The first few days we were in a lovely hotel, just outside Oslo, then some of us caught planes to the Svalbard Archipelago (it used to be called Spitzenberg) for another few days.

We had a radio station operating in each of the venues and there was a YL operator on duty for 10 or 12 hours a day. I hope you were able to have a contact with either JW1SYL or JW6SYL. The QSL cards should be available soon. Please QSL LA8FOA if you have not already done it.

There were 32 in Oslo, including half a dozen OMs, and 22 of us went on to Svalbard.

There were some faces that will be familiar to the keen DXers out there, including the ones in the main photo: Ruth IT9ESZ, Kay WA0WOF, and Eine SM0UQW. We also had Rosel DLKWF and Evelyne F5RPB, Mio JR3MVF and Sarla VU2SWS, all active DXers.

The Meet was organised by Unni LA6RHA and Ingrid LA6FNA and representatives of each of the Scandinavian countries were there. So the only two YL operators in Iceland were there, along with representatives from Norway, Sweden, and Denmark. Two YLs at their first International were Liz M0ACL and Nicola (Nikki) M5YLO along with Liz's OM Brian G0UKB.

Cheryl N0WBV and her OM John KT0F were present with John's parents (this four had all been at the ALARAMEET in Ulverstone last year, so it was like meeting recent old friends), whereas for me many of the attendees were friends whom I had met before. But perhaps only once before. As YL amateurs, it makes no difference how long ago we have met; we meet again as old friends.

Apart from meeting and greeting we were taken to some interesting places near Oslo. One of the most interesting was the fort at the mount of Oslofjiod which succeeded in sinking a German boat carrying soldiers to invade Norway in June 1940.

Although the sinking did not stop the invasion, it delayed it by 24 hours and allowed a number of important people to escape to England where they could live to fight another day.

We also had time to spend in a village devoted to all things Christmassy and there was time for shopping in Oslo as well. The OMs were taken on a special excursion while the YLs were having a conference. They went to a fire station and were able to go up in a platform lift. Definitely an exciting outing. Every little boy wants to be a fireman at one time or another, so they had a second chance.

To get to Svalbard we had to take a plane to Tromso and then another plane to Svalbard. As we had several hours between planes in Tromso, we had a chance to see something of the city. We crossed the fjord by a beautiful bridge but were taken under the sea via tunnel on the way back. I was shocked to see, not one but at least two road crossings IN THE TUNNEL. This is certainly nothing I had ever expected to see, anywhere.

For an Australian, the weather on Svalbard was very different. The morning temperature was about +3° C and the afternoon temperature reached +6° C, but as long as you wear padded clothes and there is no wind you can do whatever you wish. Wind certainly makes you aware that it is cold.

Instead of car parking, there are places designated for snow scooter parking! The shops sell goods duty free, so we all bought some goodies.

There was a boat trip to Barentsburg, a Russian possession. Like Langerberg, the town we stayed in, Barentsburg is a coal mining town. However, as a Russian possession, to ring a Russian phone number is a local call but it is a long distance call to Langerberg!

The boat we were on was used by the local rescue team for practice at landing on a boat from a helicopter, and while we were looking around Barentsburg, the local school children (15 in all) went on an excursion on the boat. We saw bergy bits in the water and had a small block of ice fall from the roof of an ice cave, into the water – as we watched. Interestingly enough, because the block fell at the mouth of a cave, the sound was like a cannon going off, probably from the echo effect. Most impressive.

The International Meet in Oslo and the visit to Svalbard was all exciting for me. I hope you had the chance to make a contact or two with the special event stations during that fortnight, too. Everyone took a turn at the mike or the key and the result was very satisfactory, though there is some work to do now dealing with the QSL cards.

There was only one sadness: Matthias who had hosted Unni and Ingrid while they were on Svalbard, and who had loaned us his shack, became an SK very suddenly about a month after we were on the Island. Our sympathy goes to Inger and all his friends. **ar**

50 years Married, 30 Years ALARA

Former ALARA committee member Marilyn Syme VK3DMS, who just retired, with her OM Geoff VK3ACZ celebrate their golden (50th) wedding anniversary with the South Australian ALARA YLs at the Morphett Arms Hotel.

The couple were in Adelaide, away from their home in Mildura. The anniversary lunch was organized by Jenny VK5FJAY (behind Marilyn). Earlier this year, Marilyn was the first ALARA member to be awarded a certificate of appreciation from ALARA for her 30-year stint in the association.

Marilyn VK3DMS and Geoff VK3ACZ celebrate their golden wedding anniversary. Photo by Kevin Zietz.

2009 Svalbard : ALARA YL Christine Taylor VK5CTY (bottom right) attends 2009 polar DXpedition to Svalbard with the YLs of Scandinavian Young Ladies Radio Amateurs (SYLRA) near Oslo (Sweden). Photo by Christine Taylor VK5CTY.

Ruth IT9ESZ, Kay WA0WOF, and Mio JR3MVF share a moment

Craig Edwards VK8PDX
vk8pdx@yahoo.com.au

Contest Calendar for December 2009 — January 2010

December	5 - 6	ARRL EME International (50-1296 MHz)	All
	12 - 13	ARRL 10 metre Contest	CW & Phone
	12 - 13	UBA Low Band Contest	All
	13	SKCC Weekend Sprint	CW
	18	Russian 160-Meter Contest	CW & Phone
	19	OK DX RTTY Contest	RTTY
	19	RAC Canada Winter Contest	CW & SSB
	19 - 20	Croatian DX Contest	CW
January	1 - 31	**Ross Hull Memorial VHF/UHF**	**All**
	2 - 3	ARRL RTTY Round-Up	RTTY
	9 (tbc)	070 Club PSKFest	PSK31
	16 - 17	**Summer VHF-UHF Field Day**	**CW & Phone**
	16 - 17	UK DX RTTY Contest	RTTY
	29 - 31	CQWW 160m	CW

It has come to the end of the year and most of us have had a go at some of the major world wide contests over the past few months.

We can now start dreaming that hopefully Santa can fit that dream antenna in his sleigh and that the reindeer have the engineering experience to install a new crank-down tower to sit it on.

I write this column just a few days after the CQ World Wide SSB and I am still feeling tired, trying to find the spare time over a few days after the event to catch up on sleep, go to work, write out and send 120 QSL (postage and $US costs...ouch!!!!).

And of course, have the column ready. Which means I am a walking zombie who is dreaming of a Saturday morning sleep in.

It was great to see people diving into 15 m and 10 m with the sun starting to play nice right in time for the contest. Hopefully by the time you have this magazine in your hands we will have regular openings on the higher bands.

One note for CQWW SSB was this news item that we all received just before the start of the contest:

"The amateur radio and contest community worldwide mourns the tragic loss of the entire C6APR team.

Edwin F. Steeble K3IXD/C6AXD, James R. "Randy" Hargenrader K4QO/C6AQO, Peter Radding W2GJ/C6APR and E. Dallas Carter W3PP lost their lives on 21 October when their aircraft crashed and burst into flames shortly after take-off from Summerville, South Carolina.

They were headed to Crooked Island, Bahamas, where they expected to take part in the CQ WW DX SSB Contest."

There was a memorial station during the contest from the Trident Amateur Radio Club (N4EE).

We all give our condolences to the family and friends of those who lost their lives following the hobby that they loved.

Trans-Tasman CW & Digital Contest Results 2009

Over the page are the top scores for all categories. It should be noted that there were some people who participated in this event that didn't put in their entries.

If they had done so, Contest Manager

For details of the
Ross Hull Memorial VHF-UHF Contest 2010
and
Summer VHF-UHF Field Day 2010
see the special section starting on page 41

ZL3AKM pointed out that some would have reached the podium in certain categories.

It is also worth mentioning that ZL3AKM would also have figured very prominently in the awards but as Contest Manager he is not eligible.

Open

1st place	ZL1TM
2nd place	VK2CCC/QRP
3rd place	VK2IM

CW

1st place	ZL1TM
2nd place	VK2CCC/QRP
3rd place	VK2IM

Digital

1st place	VK1WJ
2nd place	ZL2T
3rd place	VK2KDP

QRP

1st place	VK2CCC/QRP
2nd place	VK2IG/QRP
3rd place	VK3TX/QRP

VK

1st place	VK2CCC/QRP
2nd place	VK2IM
3rd place	VK2IQ/QRP

ZL

1st place	ZL1TM
2nd place	ZL2AUB
3rd place	ZL2T

Best Final Hour

ZL1TM

ar

Where to find the Rules

ARRL 10-Meter Contest 2009 Rules

Please visit the website at
www.arrl.org/contests/rules/2009/10-meters.html rms

070 Club PSKFest

This contest is in the digital mode of PSK31 and is sponsored by the Penn-Ohio DX Society. At the time of writing this column the date and rules for 2010 were not confirmed, however it should be in the second week of January, so check out the website at

www.podxs070.com//contests/pskfest_rules.htm

ARRL RTTY Round Up 2010 Rules

Please visit the website at

www.arrl.org/contests/rules/2010/rtty.html

Russian 160 metre Contest

The rules for this event are at

www.radio.ru/cq/contest/rule-results/index11.shtml

OK DX RTTY Contest

The rules for this event are at

www.crk.cz/ENG/DXCONTE

SKCC Weekend Sprint

The rules for this event are at

www.skccgroup.com/sprint/wes

RAC Canada Winter Contest

The rules for this event are at

www.rac.ca/en/rac/programmes/contests/

RAOTC CLUBS

The Radio Amateurs' Old Timers' Club Inc., a group with an interest in older radios and the development of communications, is one of the few national amateur radio clubs in Australia. This brings its difficulties as regards contacts between members because of the distances across the country.

There are socially active cells in VKs 6, 5 and 3 where regular luncheons are held. The Melbourne luncheons are held in March and September and attract an average of 50 members for a three-course meal and a speaker.

The September 2009 luncheon in Melbourne was going to be of great interest with a demonstration and talk on the new digital radio broadcasting mode. However, Sydney had a severe dust storm and our intended speaker was unable to return to Melbourne in time. Not to be put off, Club President Ron VK3AFW persuaded two members present, John Adcock VK3ACA and Drew Diamond VK3XU, to give impromptu talks on their work in establishing a presence on the new VLF band. These were most informative and maybe listened to on the Club website www.raotc.org.au

The Club's magazine OTN is very popular and members can purchase a complete set of over 30 years of issues on DVD from the Editor Bill VK3BR.

Another important regular club activity is the news and information broadcast which goes to air on the first Monday of the month (except for January) at 10 am local time in VK3 and VK6. Ron VK3OM co-ordinates the broadcasts and relays with help from Dave VK3ASE, Drew VK3XU, Colin VK3LO, Laurie VK3AW, Ron, VK3AFW, Dennis VK6KAD, Winston VK7EM, Bill VK3BR and Bruce VK3UV.

Other States can envy VK6s with their access to a large repeater system for the monthly broadcast. Currently there are trials of the broadcast being sent via a UHF repeater VK3RBY in the Dandenongs and on two metres in Northern Tasmania. Our thanks to the relay operators involved.

In recent years the Club has run a QSO Party in September giving members an opportunity to work each other preferably using any older equipment that they may have. This year the results were:

Highest scorers, all sessions, 1st Ken VK2KP 44 points., equal second Mark VK6AR, and Ron VK5RV, 37 points. Top F call, Wayne VK7FWAY, 43 points.

In session 1 Kevin VK3AKT was top with 32 points and session 2 Phil VK6SO just in front of Mike VK3KTO and Luke VK3HJ. The top CW only scorer was Ian VK3JS on 26 points.

Perhaps the numbers of contacts by any individual may not be huge, but there is a high interest level amongst those who do operate. Again, our sincere thanks to everyone who did make the effort.

73 Ian VK3JS, Ron VK3AFW ar

Hamads *classifieds* *Free to Members*

FOR SALE – NSW

MDS downconverter, $10.
N and SO239 switches, filters, SWR bridges, magnetic bases and mobile whips.
Digital satellite RX's -
Nokia 9500S with DVB2000 S/W, $200.
Xanadu DSR, $60.
Zenith DTH300-S, $10.
2xPace DGT400's,$10 each.
Analogue satellite RX's –
Pace IRD50, $10.
Other satellite parts –
DX Antenna DSA527N Ku LNBF, $10.
2xDX Antenna DSA527D, Ku LNBF's, $10 each
3xZinwell SAB-09C coax relays, $20 each
4xIrdeto CAM's, not CI, various ages and S/W, $40 each.
AWA RL1500C RX tuned to 1691 MHz, $30.
Contact Roger VK2DNX, on 02 9546 1927 or VK2DNX@Hotmail.com

Books for sale at Scotty's shack are –

Dictionary of Electronics, Chambers, 1981; Principles of electronics, Floyd T, 1981 Bell & Howell; Experiments in electronic circuits, Stanley B H, 1982 Merril; Electronic principles for electronic circuits, Jemmerson J, 1985 McGraw Hill; Transistor and integrated electronics, Kiver M, 1972 McGraw Hill; Transistor electronics, Gerrish H, 1969 Goodheart-Willcox; Australian electrical wiring, Pethbridge K, 1986 McGraw Hill; Digital fundamentals, Floyd T, 1982 Merril; Practical applications of DC theory, 1976 Texas Instruments; Practical applications of AC theory, 1981 Texas Instruments; Basic electronics, NYIT, McGraw Hill; Understanding digital troubleshooting, Radio Shack, Sams; PAL TV servicing, Seal D J, Foulsham; Why it IS so, Sumner-Miller J; 50 basic exercises, Lamoitier J; Understanding oscillators, Davis B, Prentice-Hall; Radio charts and nomographs; Digital data systems, Tocci R, Prentice-Hall; Pulse techniques, US Army; Zener diode handbook, IRC; Transistor data, NS Electronics; Voltage regulator handbook, National Semiconductor; The continuous wave, Aitken H, Princeton University; Dick Smith Funway into electronics, Dick Smith; Getting into microprocessors, Electronics Australia.
Please make a bid by email or text, and on 15 December I will let you know if you are successful.
Scotty VK2KE, on 0438 218 897 or gsco8077@bigpond.net.au

Morse key paddle, Hi Mound type No Mk 701, for use with an electronic keyer, in immaculate condition, hardly used and in original box, $85.00 ONO.
Yaesu FLDX-400 transmitter, collectors item, is in going condition and unmodified, $300.00 ONO.
Scotty VK2KE, on 0438 218 897 or gsco8077@bigpond.net.au

WANTED - NSW

A fuse holder to suit a Collins R391 RX.

Nick L20106. Phone 02 9477 2134

WANTED - VIC

Wanted: Collaro turntable, model RC54 or similar, or a tone arm complete with cartridge, for an Astor 6 table radiogram, unfinished project.

Barry VK3AK, QTHR. Phone 03 9363 5628, or barryjw@optusnet.com.au

WANTED - QLD

I am assisting a charity in Zambia, in Africa, to set up a shortwave broadcasting facility there. I have a need for a couple of pairs of Jones plugs and sockets. Apparently these are no longer available new. These are the connectors with four pins running one way, and the other four pins at right-angles. Any help greatly appreciated.

John VK4BJ - Phone 07 3378 4483 or 0438 220 742.

FOR SALE – SA

Want a project to keep you occupied over the festive season, or a great present for someone special? The VK5JST Antenna Analyser kits are still available. Build yourself an extremely useful item for your shack, and improve your HF antenna efficiency. For more details see www.scarc.org.au and our dispy ad this issue.

Contact SCARC, Box 333, Morphett Vale. SA. 5162, or email kits@scarc.org.au

FOR SALE - WA

Vintage restored 1950/1960 British 'PANDA CUB' transmitter (35-40 W) which covers 160 to 10 metres, using a 807 PA modulated by a pair of 6L6s, paired with a restored BC-348R receiver (from a Flying Fortress or a Liberator bomber) and a relay controlled TR system. Get yourself a post World War II ham radio station! There are manuals for both radios, and spare valves for the Panda Cub, plus a lovely looking crystal microphone on a stand. $650 for the lot.
Contact Steve VK6VZ by email at: vk6vz@arach.net.au

Trimble GPS active antenna external mount, new. $10.50 including P&P to VK.
Brian VK6ABM QTHR, Phone 08 9574 6111, email vk6abm@wia.org.au

WANTED – WA

EC-19 or EDC-20 separation kits to suit Alinco DR-599T.
Contact Jeff VK6JKR on 0427 197 017 or at vk6jkr@upnaway.com

PLEASE NOTE

NEW HAMAD ARRANGEMENTS

ALL HAMADS SHOULD BE ADDRESSED TO

'HAMADS'

PO BOX 2042

BAYSWATER VIC 3153

OR EMAIL TO

hamads@wia.org.au

About Hamads

- Submit by **email (MUCH PREFERRED)** or on the **form on the reverse of your current Amateur Radio address flysheet**. Please print carefully and clearly, use upper AND lower case.
- Deceased estates Hamads will be published in full, even if some items are not radio equipment.
- WIA policy recommends that the serial number of all equipment for sale should be included.
- QTHR means the address is correct in the current WIA Call Book.
- Ordinary Hamads from those who are deemed to be in general electronics retail and wholesale distributive trades should be certified as referring only to private articles not being re-sold for merchandising purposes.
- Commercial advertising on these pages Contact Newsletters Unlimited.
- Copy to be received by the deadlines on page 1 of each issue of Amateur Radio.
- Separate forms for For Sale and Wanted items. Include name, address STD telephone number and WIA membership number.

'Hamads' PO Box 2042 BAYSWATER VIC 3153 **hamads@wia.org.au**

ADVERTISERS INDEX

Av-Comm 60
Bookshop ..... Fly
Centre Victoria Radiofest 38
Com-an-tena 22
Cookson (Jackson Bos) 60
Hamak Electrical Industries 60
Icom ..... OBC
Little Devil Antennas 60
Ludatronics 60
RF Tools 60
SCARC 62
Tet Emtron 41
Tower 60
TTS ..... 29 and 60
VKHam 60
WIA Merchandise 28

TRADE PRACTICES ACT
It is impossible for us to ensure that the advertisements submitted for publication comply with the Trade Practices Act 1974. Therefore, advertisers and advertising agents will appreciate the absolute need for themselves to ensure that the provisions of the Act are strictly complied with.

VICTORIAN CONSUMER AFFAIRS ACT
Advertisements with only a PO Box number as the address cannot be accepted without the addition of the business address of the box-holder or seller of the goods.

RM Products Italy

are now available in Australia after the appointment of

Hamak Electrical Industries Pty Ltd

as distributor for RM products

Visit the Hamak website at

Hamak.com.au for

Linear amplifiers, Power supplies and accessories

AMIDON

FERROMAGNETIC CORES

tts systems

Phone 03 5977 4808. Fax 03 5977 4801

info@ttssystems.com.au

Little Devil Antennas®

Tasmanian Tuff

High Performance Antennas

Fringe area specialists

SIMPLE IN USE EFFECTIVE IN SERVICE

NEXT G Directional Yagi Antennas

Optus Mobile Digital phone antennas (900 MHz) enables you to use your Optus mobile phones or modems in remote - fringe areas.

Tim Sulman (Manager) 0409 258 154

Ken Sulman VK7DY (Technical Adviser) 0409 136 268

www.ldantennas.com.au

www.broadbandantennas.com.au

EMAIL: sales @ ldantennas.com.au

TASMANIAN MADE - TASMANIAN PROUD

JACKSON BROS

www.jacksonbrothers.com.au

Highest quality products made by UK craftsmen

Variable and trimmer capacitors, reduction drives, dials, ceramic standoffs

CATALOGUES, PRICE LISTS AVAILABLE

HAMMOND ENCLOSURES

HAMMOND MANUFACTURING™ *Large range of quality electronic enclosures for the discerning Radio Amateur.*

Diecast, extruded aluminium and plastic enclosures and instrument cases. As seen in many ARRL Handbook projects.

Cookson Controls CHARLES I COOKSON PTY LTD

11-13 Port Rd Queenstown SA 5014

Tel: (08) 8240 3200 Fax: (08) 8240 3233

sales@jacksonbrothers.com.au

ccookson@hammfg.com

RF Tools

RF Tools is PC software that transforms your 8920, 8921 or 8924 RF Comms Test Set into a multi-purpose RF analyser.

- Cable Fault Location (TDR)
- Interference Monitoring
- Signal Strength Logging
- Antenna Return Loss
- Diplexer Insertion Loss
- Screen Capture

Special discounted price for licensed hams.

www.measurement.net.au

VKHAM.COM

AUSTRALIAN AMATEUR RADIO

Hundreds of pages and links related to Amateur Radio and radio in general

Home of

- **VK Classifieds**
- **VK Auctions**
- **VKs on the Internet**

Repeater Maps, Software, Prefix Maps and more...

Tower Communications

Authorised dealer for the world's leading brands

Vertex Standard AUSTRALIA

ICOM

14 Mary Street, Hazelmere, Western Australia 6055

08 9274 1118

fax 08 9250 3734

tower@eon.net.au

www.towercom.com.au

Visit our website to see ALL our famous names

'we ship Australia-wide'

LudaTronics+ AOYUE

Soldering, De-Soldering & Re-Work Stations at Amazing Prices!!

See all our products at:

www.ludatronics.com.au

E-Mail: sales@ludatronics com.au

Tel. 07 3385 7629

Fax. 07 3385 7625

Call Roger VK4TV (ex VK4UPS) and discuss your requirements

Tecsun PL 600 HF Receiver

Easy to use

600 memories

Identical coverage to Degen 1103

Product Showcase Silicon Chip October 2008

ONLY $179 + shipping

Av-Comm Pty Ltd

24/9 Powells Rd

Brookvale NSW 2100

Tel: 02 9939 4377

Fax: 02 9939 4376

www.avcomm.com.au

If you run a small

Home-Based Business

related to

Amateur Radio

these pages are the ideal spot to advertise.

The rates for these pages are structured to encourage just such businesses.

Call John Nieman at Newsletters Unlimited

03 9756 7797 or email at

captnnemo@ozemail.com.au

for full information.

DIRECTORY

The Amateur Service:

... a radio communications service for the purpose of self training, intercommunication and technical investigation carried out by amateurs, that is, by duly authorised persons interested in radio technique with a personal aim and without any pecuniary interest. 1.56 ITU Radio Regulations.

The Wireless Institute of Australia represents the interests of all amateurs throughout Australia.

The WIA offers one year and five year memberships for **Full Member $75 ($356), Overseas Member $85 ($403)** and **Concession Member - Pensioner $70 ($332)**, and one year memberships for **Concession Member - Student $70** and **Family Member $30**.

National Office

Unit 20, 11-13 Havelock Road
PO Box 2042
Bayswater Vic 3153

Contact

Phone 03 9729 0400
Fax 03 9729 7325
10 am to 4 pm daily
nationaloffice@wia org.au
http //www.wia.org au

News Bulletin Schedule

Subject to change
See www wia org au and follow National News prompts
Contact nationalnews@wia org au
National VK1WIA news is distributed to all states

Advisory Committees

Chairman of the regional committee is in bold

New South Wales and ACT

Email vk2advisory@wia.org.au
Alan Hawes VK1WX (02) 6258 2568
Owen Holmwood VK2AEJ
Dominic Dahl VK2YDD
Col Christiansen VK2BCC

Victoria

Email vk3advisory@wia.org.au
Bryan Pliatsios VK3HXR 0403 604 242
Lee Moyle VK3GK
Noel Ferguson VK3FGN
Mark Stephenson VK3PI

Queensland

Email vk4advisory@wia.org.au
Don Wilschefski VK4BY (07) 4928 0065
Kevin Johnson VK4UH
JR (Ross) Anderson VK4AQ
Harvey Wickes VK4AHW

South Australia

Email vk5advisory@wia.org.au
David Box VK5DB (08) 8532 1605
Peter Reichelt VK5APR
Paul Hoffman VK5PH
Graham Holman VK5GH

Western Australia

Email vk6advisory@wia.org.au
John Howlett VK6ZN 0427 380 118
Neil Husk VK6BDO
Robert Bristow VK6POP
Steve Wellington VK6FSWR

Tasmania

Email vk7advisory@wia org au
David Potter VK7YUM (03) 6395 4400
Clayton Reading VK7ZCR
Jason Reilly VK7ZJA
Peter Rumble VK7IY/VK4KX

Northern Territory

Email vk8advisory@wia.org.au
Garry Woods VK8GW (08) 8983 1620
Alan Baker VK8AB
Trevor Wardrope VK8TJW
Wayne Cockburn VK8ZAA

Broadcast details

VK1 VK1WIA: Sunday 0900 local on the Mt Ginini repeaters 146.950 and 438 050 MHz. The UHF repeater requires 123 Hz access tone and is linked to the Goulburn repeater.

VK2 VK2WI: Sunday 1000 and 1930 local, on 1.845, 3.595, 7.146, 10.125, 14.170, 28.320, 52.525, 145.6000, 147,000, 438.525 and 1273.500 MHz. Also 5.425 MHz USB in the morning..

Plus provincial relays both sessions and country relays in the morning via local repeaters. VK1WIA news is included in the morning.

VK3 VK1WIA: Sunday 10:30 am and 8 pm Local Time. Amateur Radio Victoria VK3BWI B/cast Network: 3.615, 7.158, 10.133, 147 250 VK3RMM Mt Macedon, 146.700 VK3RML Mt Dandenong, 147 225 VK3RWG Mt Baw Baw, 439.800 VK3RMU Mt St Leonard.

VK4 VK1WIA: Sunday 0900 local via HF and major VHF/UHF repeaters.

VK5 VK5WI: Sunday 0900 local, on 1.843, 3.550, 7.140, 28.470, 53.100 AM, 146.900 (SE), 146.925 (CN), 147.000 and 439.975

VK6 VK6WIA: Sunday 0900 local, on 1.840, 3.582, 7.140, 10,125, 14.116, VK6RHF Perth 29.680, VK6RAP Perth 53.800, VK6RAP Perth 146.700, VK6RMW Mt William 146.900, VK6RBN Busselton 147.350, VK6RUF Roleystone 438.525, and on UHF CB Ch 1 Perth North.

Sunday 1900 local, on 3.565, VK6RHF Perth 29 680, VK6RAP Perth 53.800, VK6RAP Perth 146.700, VK6RMW Mandurah 146.900, VK6RMS Mt Saddleback 147.250, VK6RBN Busselton 147.350, VK6RUF Perth 438.525, and on UHF CB Ch 1 Perth North

Also in 'Realaudio' format from the VK6WIA website.

VK7 VK7WI: Sunday 0900 local, on 1.840 AM, 3.570, 7.090, 14.130, Hobart CB 27.225 LSB, 28.525, 53 825 FM, EchoLink Node 100478 (VK7AX-L) 145.350, VK7RMD NW 146.625, VK7RAD and VK7RHT South 146.700, VK7RNW NW 146 750, VK7RAA North 147.000, Ulverstone 147.425, Ulverstone 444.250/449.750 and Hobart UHF CB Channel 15.

Tuesday 2100 local VK7RMD NW 146.625.

VK8 Sunday 0900 local, on 3.555, 7.050, 10.130, 14.337, 145.900 (DARC VK8DA).

Sunday 0900 and 2000 local 145.900 IRLP 6800 Katherine (Mike VK8MA).

Sunday 1000 local 439.150 Katherine (Steve VK8SJ)

Note that many clubs broadcast the WIA News via local VHF and UHF repeaters. Check the News section of the WIA website.

Foundation Corner Four

Tools and test equipment

Ross Pittard VK3CE
vk3ce@amateurradio.com.au

This month we look at various tools and test equipment found in the well equipped amateur radio shack.

This can range from a simple soldering iron and multimeter through to highly sophisticated analysers and oscilloscopes. It all depends on the expertise and experience of the individual.

For many amateurs their first experience of electronics is constructing projects described in *Silicon Chip* magazine or for those of us old enough to remember the now defunct *Radio Television and Hobbies* magazine.

When starting out I would suggest a basic soldering iron, some hand tools, a multimeter, perhaps a dummy load and a SWR/power meter. It is worth remembering that the SWR meter often sold with CB radios is sometimes unsuitable for the lower HF bands and particularly the VHF/UHF bands.

Jaycar and similar stores have an extensive range of soldering irons and small digital multimeters.

When buying a multimeter (Figure 1) it is worth considering one with an inbuilt buzzer or continuity tester. When checking for antenna shorts it is far easier to listen for the buzzer than have to look at the meter all the time.

Expect to pay in the range 20 to 50 dollars for a basic soldering iron and 10 to 20 dollars upwards for a digital multimeter.

Hand tools can be purchased individually or sometimes as a technician's kit complete with a case or box. Many high quality but pre loved tools and test gear can be purchased at swap meets and hamfests, although it is always a good idea to check their operation before purchasing.

A small piece of solder and a battery is handy to carry at hamfests so soldering irons can be checked to melt solder and multimeters can be checked to measure volts!!

Basic measurements on your antenna systems can be done with a simple power and SWR meter which again can be new or pre loved. Most amateurs start out with a combination SWR/power meter from one of the popular manufacturers and these can range in price from tens to hundreds of

Do you want your HF antennas to perform at their optimum, and are your soldering skills adequate?
If so, this is the shack tool for you.

The VK5JST Antenna Analyser

receives rave reviews from hams from all over the world.

As of November we have sold over 250 to overseas buyers this year.
See eHam.net for reviews by hams who have built this useful tool.
The South Coast Amateur Radio Club provides these complete kits with a pre-programmed microprocessor at a very reasonable cost as a fund-raising activity.

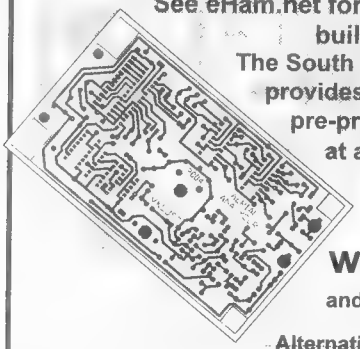

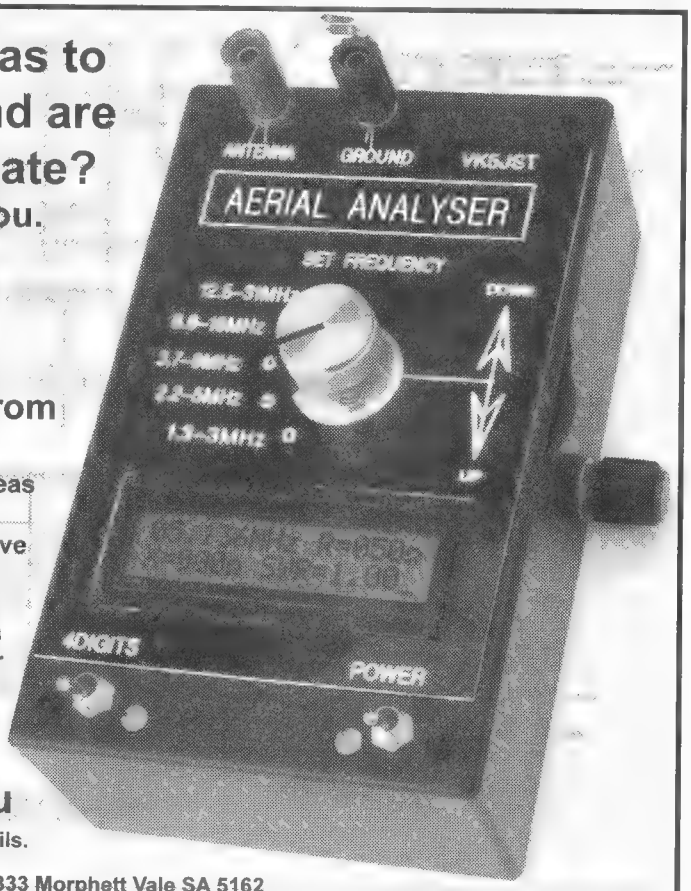

See
www.scarc.org.au
and the 'projects' link for full details.

Alternatively, write to SCARC PO Box 333 Morphett Vale SA 5162

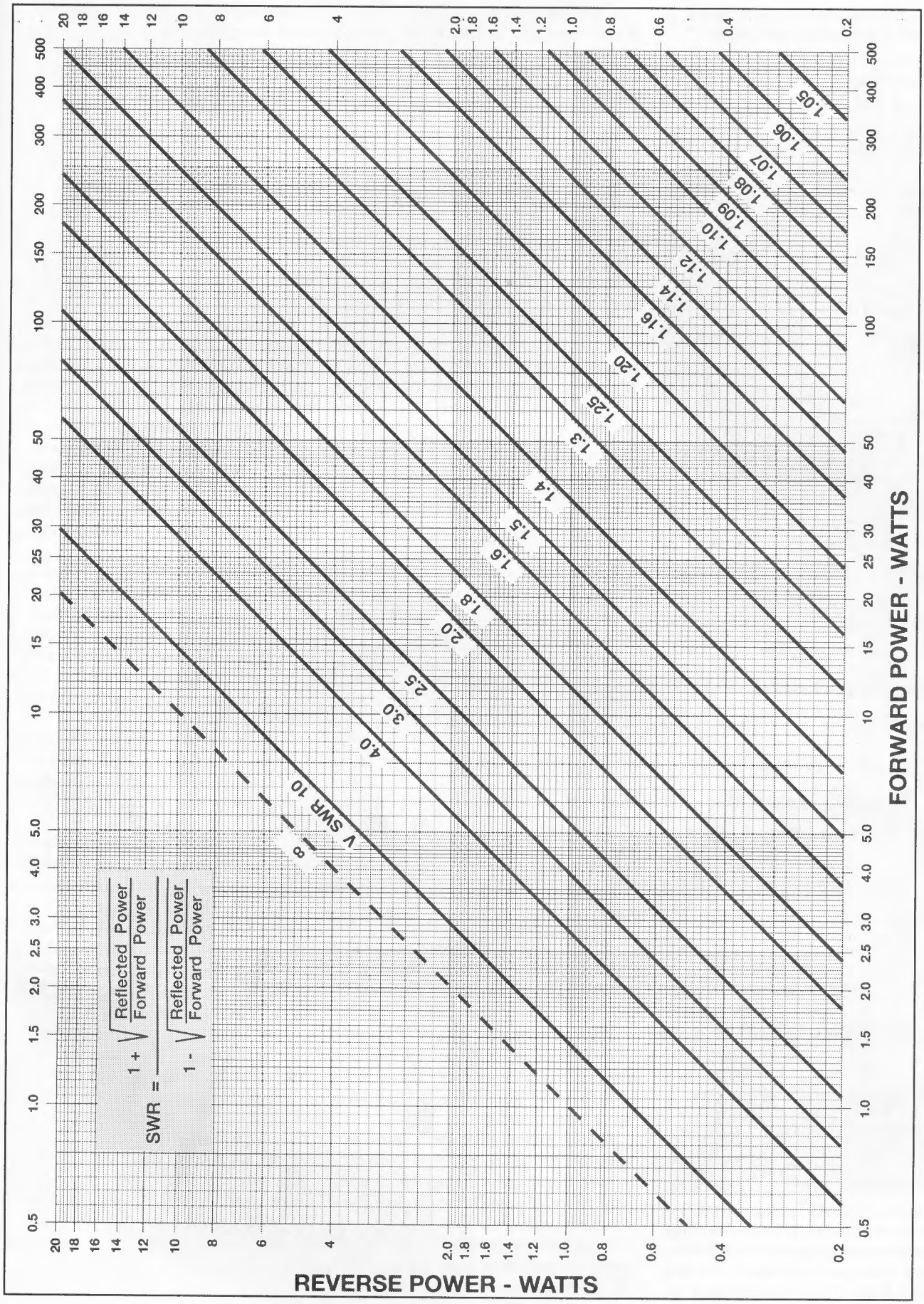

Figure 4: An SWR Nomograph chart showing the relationship between forward and reflected power for different SWR readings.

dollars, depending on power handling capability and frequency range.

It is always a good idea to check the sensitivity of an SWR meter on the 80 metre band as sometimes it is difficult to get full scale deflection with Foundation licence power levels necessary when calibrating the SWR meter.

Figure 1: A typical multimeter.

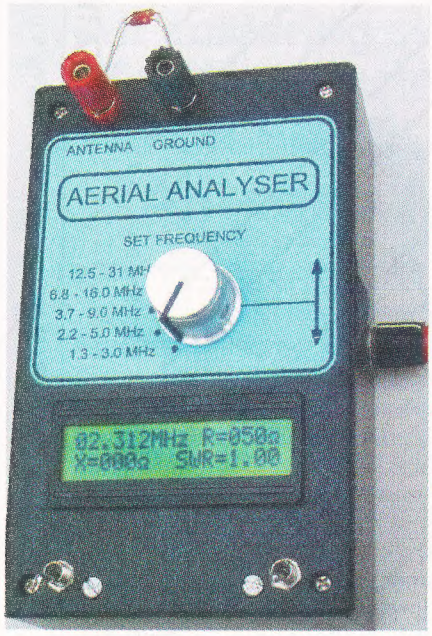

Figure 5: The very popular VK5JST Antenna Analyser. (This is the older fascia model which maybe seen at swap meets and hamfests). The new fascia is shown in the ad on page 62.

A good second hand SWR/power meter would usually be around 30 to 80 dollars at swap meets.

A number of popular HF antenna tuners also have inbuilt SWR/power functions which are useful on HF but most would not be suitable for the VHF/UHF bands. Expect to pay in the region of $200 to $300 for a good used antenna tuner with inbuilt SWR/power meter.

A review of the leading amateur power meters was published by QST Magazine (July 2002) and the article can be viewed online at the link below.

A different approach to the SWR meter is the industry standard Bird or Telewave power meters (Figure 2, facing page). The Bird meter can make accurate power measurements from a few watts to several kilowatts across the frequency range of 450 kHz to 2.7 GHz.

This is achieved by using small elements or slugs (Figure 3, facing page) that are accurately calibrated in the factory and cover a small frequency and power handling range. The idea being that various slugs are purchased to cover the frequency range and power handling capability that the user requires.

The Telewave meter comes in two models, one covers the frequency range 2-200 MHz and the other 20-1000 MHz, both with a 500 watt upper limit. Neither model requires additional accessories to function over the designated range.

These meters read both forward and reflected power and when this is done SWR can be calculated by the use of an SWR nomograph (chart).

This is a handy chart (Figure 4 previous page) and can be used, of course, with any power meter once the forward and reflected readings have been made.

If your meter is not switchable, just reverse the leads to read reflected power. For those wishing to print a full size chart it is available for download from my website.

Used Bird meters can be occasionally seen at hamfests starting at about $250, but depending on the number of accompanying elements; individual Bird elements usually sell for around $60 to $70 at swap meets;

Telewave meters are harder to come by and expect to pay $300 to $400 for a good one.

Anyone interested in purchasing a Bird or Telewave meter should have a look at the Martin RF Supply Shop in the US. This is an excellent source for used meters and Bird elements, particularly when the US/Australian Dollar rate is near parity. I have dealt with these people several times and they offer prompt delivery.

Individual amateurs may not want to go to the expense of a Bird or Telewave meter but they are always a good item for the local club to purchase and lend out to members.

Another excellent project is the VK5JST Antenna Analyser (Figures 5 and 6) which was described in the May 2005 issue of *Amateur Radio* magazine. Kits for this project are available from The South Coast Amateur Radio Club (see link below).

The original article, with photos, is available for download from the clubs website; I built one of these a few years ago and would recommend it to anyone who wants to experiment with HF antennas and it would make an interesting and useful club construction project.

A very useful addition to the shack is of course a dummy load; there have been plenty of designs for homebrew loads over the years including a number in this magazine.

A popular load that is readily available at swap meets started life in mobile phone base station transmitters (Figure 7). These are essentially a high power surface mount resistor mounted on a large heatsink and are capable of handling, for a short period, 50-100 watts and are good up to 23 cm. They usually sell for around $10.

Just remember when purchasing second hand gear that most traders at hamfests are quite willing for basic tests to be carried out on site and always check what you are buying before parting with your dollars. My motto is always buy quality items as they will last a lifetime.

That is it for this month, happy hamfest hunting. 73.

ar

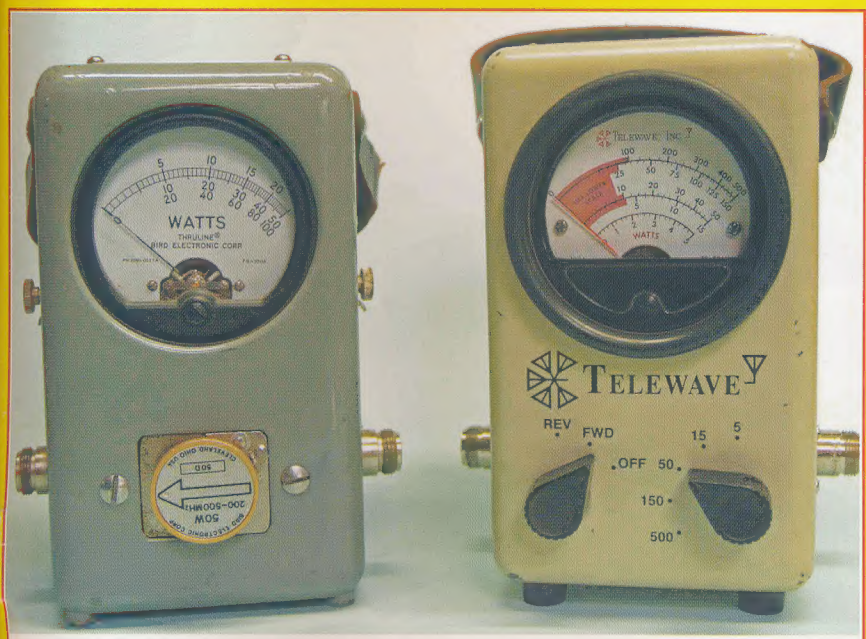

Figure 2: The Bird and Telewave meters – expensive but reliable and accurate. Note the slug in the Bird meter at left, positioned to measure reflected power.

Figure 3: Two slugs for the Bird meter, each operational on a different band, and with different power levels.

Links:

VK5JST Antenna Analyser http://www.scarc.org.au/

Comparison of popular power meters http://www.palstar.com/qstWM150.pdf

Nomograph Chart: http://www.vk3ce.no-ip.info - then click on downloads.

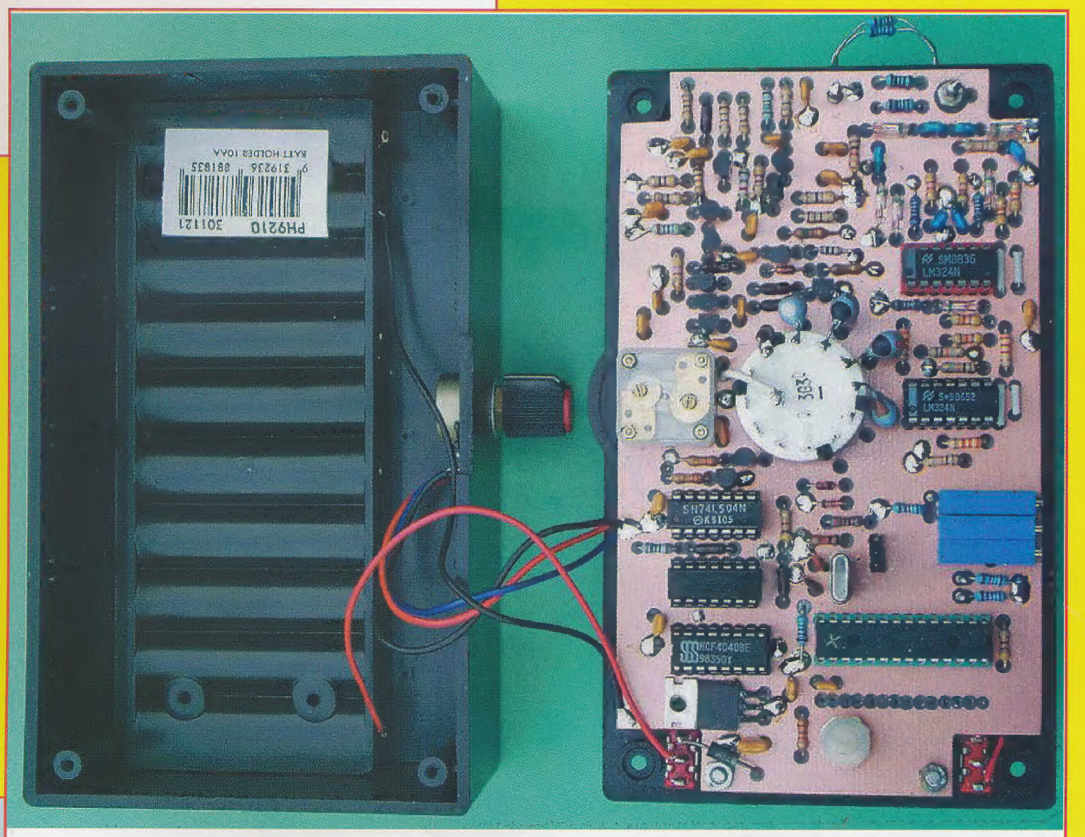

Figure 6: The inside view of the VK5JST Antenna Analyser.

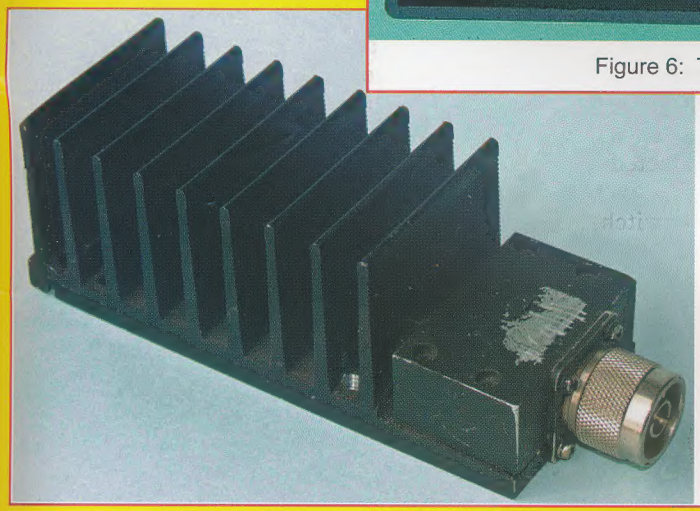

Figure 7: A dummy load, this one rescued from a decommissioned mobile phone base station transmitter.

The VK5JST Antenna Analyser is an excellent home brew construction exercise for any club or individual.

All proceeds from the sale of these kits support the South Coast Amateur Radio Club.

New 5 Year Warranty*

DIGITAL | D-STAR

ICOM

ICOM 395

Call Icom direct or your Icom dealer for more information.
www.icom.net.au or 03 9754 7500

There are many problems associated with grey and parallel import products, for further information please visit our website.

* The 5 year warranty only applies to amateur transceivers purchased from an Australian authorised Icom dealer on or after November 11, 2009. Further conditions are available on our website.

Volume 77 Number 12 DECEMBER 2009 Print Post Approved PP349181/0042